AFFDL-TR-79-3032
Volume I

THE USAF STABILITY AND CONTROL DATCOM

Volume I, Users Manual

McDonnell Douglas Astronautics Company
St. Louis Division
St Louis, Missouri 63166

April 1979

Updated by
Public Domain Aeronautical Software
Santa Cruz CA 95061

December 1999

AIR FORCE FLIGHT DYNAMICS LABORATORY
AIR FORCE WRIGHT AERONAUTICAL LABORATORIES
AIR FORCE SYSTEMS COMMAND
WRIGHT-PATTERSON AIR FORCE BASE, OH 45433

From AFFDL-TR-79-3032
THE USAF STABILITY AND CONTROL DIGITAL DATCOM
Volume I, Users Manual

SECTION 1

INTRODUCTION

In preliminary design operations, rapid and economical estimations of aerodynamic stability and control characteristics are frequently required. The extensive application of complex automated estimation procedures is often prohibitive in terms of time and computer cost in such an environment. Similar inefficiencies accompany hand-calculation procedures, which can require expenditures of significant man-hours, particularly if configuration trade studies are involved, or if estimates are desired over a range of flight conditions. The fundamental purpose of the USAF Stability and Control Datcom is to provide a systematic summary of methods for estimating stability and control characteristics In preliminary design applications. Consistent with this philosophy, the development of the Digital Datcom computer program is an approach to provide rapid and economical estimation of aerodynamic stability and control characteristics.

Digital Datcom calculates static stability, high-lift and control device, and dynamic-derivative characteristics using the methods contained in Sections 4 through 7 of Datcom. The computer program also offer a trim option that computes control deflections and aerodynamic data for vehicle trim at subsonic Mach numbers.

The program has been developed an a modular basis as illustrated in Figure 1. These modules correspond to the primary building blocks referenced in the program executive. The modular approach was used because it simplified program development, testing, and modification or expansion.

This report is the User's Manual for the USAF Stability and Control Digital Datcom. Potential users are directed to Section 2 for an overview of program capabilities. Section 3 provides input definitions, with basic configuration geometry modeling techniques presented in Section 4. Analyses of special configurations are treated in Section 5. Section 6 discusses the available output

data. The appendices discuss namelist coding rules, airfoil section characteristic estimation methods with supplemental data, and a list of geometric and aerodynamic variables available as supplemental output. A self-contained user's kit is included to aid the user in setting up inputs to the program.
Even though the development of Digital Datcom was pursued with the sole objective of translating the Datcom methods into an efficient, user-oriented computer program, differences between Datcom and Digital Datcom do exist. Such is the primary subject of Volume II, Implementation of Datcom Methods, which contains the correspondence between Datcom methods and program formulation. This volume also defines the program implementation requirements. The listing of the computer program is contained on microfiche as a supplement to this report. Modifications, extensions, and limitations of Datcom methods as incorporated in Digital Datcom are discussed throughout the report.

Users should refer to Datcom for the limitations of methods involved. However, potential users are forewarned that Datcom drag methods are not recommended for performance. Where more than one Datcom method exists, Volume II indicates which method or methods are employed in Digita1 Datcom.

Direct all program inquiries to AFFDL FGC, Wright-Patterson Air Force Base, OH 45433; phone (513) 255-4315.

MASTER ROUTINES

Main Programs	Performs the executive functions of organizing and directing the operations performed by other program components.
Executive Subroutines	Performs user-oriented non-method operations such as ordering input data, logic switching, input error analysis, and output format selection.
Utility Subroutines	Performs standard mathematical tasks repetitively performed by method subroutines.

METHOD MODULES

SUBSONIC	TRANSONIC	SUPERSONIC	SPECIAL CONFIGURATIONS
MODULE 1 CHARACTERISTICS AT ANGLE OF ATTACK	MODULE 3 CHARACTERISTICS AT ANGLE OF ATTACK	MODULE 5 CHARACTERISTICS AT ANGLE OF ATTACK	MODULE 7 LOW ASPECT RATIO WING-BODY AT SUBSONIC SPEEDS
MODULE 2 CHARACTERISTICS IN SIDESLIP	MODULE 4 CHARACTERISTICS IN SIDESLIP	MODULE 6 CHARACTERISTICS IN SIDESLIP	MODULE 8 AERODYNAMIC CONTROL EFFECTIVENESS AT HYPERSONIC SPEEDS
MODULE 10 DYNAMIC DERIVATIVES			MODULE 9 TRAVERSE-JET CONTROL EFFECTIVENESS AT HYPERSONIC SPEEDS
MODULE 11 HIGH LIFT AND CONTROL DEVICES			
MODULE 7 TRIM OPTION			

FIGURE 1 - DIGITAL DATCOM MODULES

SECTION 2
PROGRAM CAPABILITIES

This section has been prepared to assist the potential user in his decision process concerning the applicability of the USAF Stability and Control Digital Datcom to his particular requirements. For specific questions dealing with method validity and limitations, the user is strongly encouraged to refer to the USAF Stability and Control Datcom document. Much of the flexibility inherent in the Datcom methods has been retained by allowing the user to substitute experimental or refined analytical data at intermediate computation levels. Extrapolations beyond the normal range of the Datcom methods are provided by the program; however, each time an extrapolation is employed, a message is printed which identifies the point at which the extrapolation is made and the results of the extrapolation. Supplemental output is available via the “dump” and “partial output” options which give the user access to key intermediate parameters to aid verification or adjustment of computations. The following paragraphs discuss primary program capabilities as well as selected qualifiers and limitations.

2.1 ADDRESSABLE CONFIGURATIONS

In general, Datcom treats the traditional body-wing-tail geometries including control effectiveness for a variety of high-lift /control devices. High-lift/control output is generally in terms of the incremental effects due to deflection. The user must integrate these incremental effects with the “basic” configuration output. Certain Datcom methods applicable to reentry type vehicles are also available. Therefore, the Digital Datcom addressable geometries include the “basic” traditional aircraft concepts (including canard configurations), and unique geometries which are identified as “special” configurations. Table 1 summarizes the addressable configurations accommodated by the program.

CONFIGURATION	PROGRAM REMARKS
BODY	PRIMARILY BODIES OF REVOLUTION, OR CLOSE APPROXIMATIONS, ARE TREATED. TRANSONIC METHODS FOR MOST OF THE AERODYNAMIC DATA DO NOT EXIST. THE RECOMMENDED PROCEDURE REQUIRES FAIRING BETWEEN SUBSONIC AND SUPERSONIC DATA USING AVAILABLE DATA AS A GUIDE.
WING, HORIZONTAL TAIL	STRAIGHT TAPERED, CRANKED, OR DOUBLE DELTA PLANFORMS ARE TREATED. EFFECTS OF SWEEP, TAPER AND INCIDENCE ARE INCLUDED. LINEAR TWIST IS TREATED AT SUBSONIC MACH NUMBERS. DIHEDRAL EFFECTS ARE PRESENT IN THE LATERAL DIRECTIONAL DATA.
BODY-WING BODY-HORIZONTAL	LONGITUDINAL METHODS REFLECT ONLY A MID-WING POSITION. LATERAL DIRECTIONAL SOLUTIONS CONSIDER HIGH AND LOW-WING POSITIONS.
WING-BODY-TAIL	THE VARIOUS GEOMETRY COMBINATIONS ARE GIVEN IN TABLE 2. WING DOWNWASH METHODS ARE RESTRICTED TO STRAIGHT TAPERED PLANFORMS. EFFECTS OF TWIN VERTICAL TAILS ARE INCLUDED IN THE STATIC LATERAL DIRECTIONAL DATA AT SUBSONIC MACH NUMBERS.
NON-STANDARD GEOMETRIES	NON-STANDARD CONFIGURATIONS ARE SIMULATED USING “BASIC” CONFIGURATION TECHNIQUES. STRAKES CAN BE RUN VIA A DOUBLE-DELTA WING. A BODY-CANARD-WING IS INPUT AS A WING-BODY-HORIZONTAL TAIL. THE FORWARD LIFTING SURFACE IS INPUT AS A WING AND THE AFT SURFACE AS A HORIZONTAL TAIL.
SPECIAL CONFIGURATIONS	LOW ASPECT RATIO WING OR WING-BODY CONFIGURATIONS (LIFTING BODIES) ARE TREATED AT SUBSONIC SPEEDS. TWO-DIMENSIONAL FLAP AND TRANSVERSE JET EFFECTS ARE ALSO TREATED AT HYPERSONIC SPEEDS.

TABLE 1 - ADDRESSABLE CONFIGURATIONS

TABLE 2
AERODYNAMIC OUTPUT AS A FUNCTION OF CONFIGURATION AND SPEED REGIME [4]

● OUTPUT AVAILABLE
□ OUTPUT ONLY FOR CONFIGURATIONS WITH STRAIGHT TAPERED SURFACES
▲ OUTPUT ONLY WITH EXPERIMENTAL DATA INPUT

CONFIGURATION	SPEED REGIME	STATIC AERODYNAMIC CHARACTERISTIC OUTPUT														DYNAMIC STABILITY OUTPUT								
		C_{D_0}	C_D	C_L	C_m	C_N	C_A	C_{L_α}	C_{m_α}	C_{Y_β}	C_{n_β}	C_{l_β}	q_t/q_∞	ϵ	$\frac{d\epsilon}{d\alpha}$	C_{L_q}	C_{m_q}	$C_{L_{\dot\alpha}}$	$C_{m_{\dot\alpha}}$	C_{l_p}	C_{Y_p}	C_{n_p}	C_{n_r}	C_{l_r}
BODY	SUBSONIC	●	●	●	●	●	●	●	●	●	●	●				●	●	●	●					●
	[5] TRANSONIC	●	●					●	●	●	●	●				●	●	●	●					●
	SUPERSONIC	●	●	●	●	●	●	●	●	●	●	●				●	●	●	●					●
	HYPERSONIC	●	●	●	●	●	●	●	●	●	●	●				●	●	●	●					●
WING	SUBSONIC	●	●	●	●	●	●	●	●	●	●	●				●	●	●	●	●	●	●	●	●
	TRANSONIC	□	▲	▲		▲	▲	□	□			▲				□	□	□	□					
	SUPERSONIC	●	□	□		□	□	●	●	□	□	□				□	□	●	●	●	●			
	HYPERSONIC	●	□	□		□	□	●	●	□	□	□												
HORIZONTAL TAIL	SUBSONIC	●	●	●	●	●	●	●	●	●	●	●				●	●	●	●	●	●	●	●	
	TRANSONIC	□	▲	▲		▲	▲	□	□			▲				□	□	□	□					
	SUPERSONIC	●	□	□		□	□	●	●	□	□	□				□	□	●	●	●	●	●		
	HYPERSONIC	●	□	□		□	□	●	●	□	□	□												
VERTICAL TAIL OR VENTRAL FIN	SUBSONIC	●	●	●	●	●	●	●	●	●	●	●				●	●	●	●	●	●	●	●	
	TRANSONIC	□						●	●							●	●	●	●					
	[3] SUPERSONIC	●		●	●	●	●	●	●	□	□	□				●	●	●	●					
	HYPERSONIC	●		●	●	●	●	●	●	□	□	□												
WING-BODY	[1] SUBSONIC	●	●	●	●	●	●	●	●	●	●	●				●	●	●	●	●	●	●	●	●
	TRANSONIC	□	▲	●		▲	▲	□	□	●	●	●				□	□	□	□					
	SUPERSONIC	●	□	□		□	□	●	●	●	●	□				●	●	●	□	●	●			
	HYPERSONIC	●	□	□		□	□	●	●	●	●	□												
HORIZONTAL TAIL-BODY	SUBSONIC	●	●	●	●	●	●	●	●	●	●	●				●	●	●	●					
	TRANSONIC	□	●	□		▲	▲	□	□	●	●	●				□	□	□	□					
	SUPERSONIC	●	□	□		□	□	●	●	●	●	□				●	●	●	□					
	HYPERSONIC	●	□	□		□	□	●	●	●	●	□												
VERTICAL TAIL-VENTRAL FIN-BODY	SUBSONIC	●	●	●	●	●	●	●	●	●	●	●				●	●	●	●					
	TRANSONIC	□	□	▲		▲	▲	●	●							●	●	●	●					
	[3] SUPERSONIC	●	●	●	●	●	●	●	●	□	□	□				●	●	●	●					
	HYPERSONIC	●	●	●		●	●	●	●	□	□	□												
WING-BODY HORIZONTAL TAIL	[1] SUBSONIC	□	□	□	□	□	□	□	□	●	●	●	□	□	□	□	□	□	□	□	□	□	□	
	TRANSONIC	□	▲	▲		▲	▲	□	□				□	□	□	□	□	□	□					
	SUPERSONIC	□	□	□		□	□	□	□	●	●	□	□	□	□	□	□	□	□	□	□			
	HYPERSONIC	□	□	□		□	□	□	□	●	●	□	□	□	□									
WING-BODY-VERTICAL TAIL-VENTRAL FIN	[1] SUBSONIC	●	●	●	●	●	●	●	●	●	●	●				●	●	●	●	●	●	●	●	
	[2] TRANSONIC	□	▲	□		▲	▲	□	□	●	●					□	□	□	□					
	[3] SUPERSONIC	●	□	□		□	□	●	●	●	●	□				●	●	●	●					
	HYPERSONIC	●	□	□		□	□	●	●	●	●	□												
WING-BODY-HORIZONTAL TAIL-VERTICAL TAIL-VENTRAL FIN	[1] SUBSONIC	□	□	□	□	□	□	□	□	●	●	●	□	□	□	□	□	□	□	□	□	□	□	□
	TRANSONIC	□	▲	▲		▲	▲	□	□				□	□	□	□	□	□	□					
	[3] SUPERSONIC	□	□	□		□	□	□	□	●	●	□	□	□	□	□	□	□	□					
	HYPERSONIC	□	□	□		□	□	□	□	●	●	□	□	□	□									

[1] THE EFFECTS OF JET POWER, PROPELLER POWER, AND GROUND PROXIMITY MAY BE OBTAINED FOR THESE CONFIGURATIONS IF THE REQUIRED NAMELISTS ARE INPUT, THE EFFECTS OF POWER AND GROUND EFFECTS ARE INCLUDED ONLY IN THE SUBSONIC LONGITUDINAL STABILITY RESULTS.

[2] DYNAMIC STABILITY RESULTS ARE THE SAME AS WING-BODY

[3] TWIN VERTICAL TAIL RESULTS MAY BE OBTAINED FOR THESE CONFIGURATIONS IF THE REQUIRED NAMELIST IS INPUT. THESE EFFECTS ARE INCLUDED ONLY IN THE SUBSONIC LATERAL STABILITY DATA.

[4] REFER TO DATCOM HANDBOOK FOR METHOD LIMITATIONS IF OUTPUT IS NOT OBTAINED

[5] AVAILABLE ONLY IN COMBINATION WITH A WING OR TAIL

2.2 BASIC CONFIGURATION DATA

The capabilities discussed below apply to basic configurations, i.e., traditional body-wing-tail concepts. A detailed summary of output as a function of configuration and speed regime is presented in Table 2. Note that transonic output can be expanded through the use of data substitution (Sections 3.2 and 4.5). Typical output for these configurations are presented in section 6.

2.2.1 Static Stability Characteristics

The longitudinal and lateral-directional stability characteristics provided by the Datcom and the Digital Datcom are in the stability-axis system. Body-axis normal-force and axial-force coefficients are also included in the output for convenience of the user. For those speed regimes and configurations where Datcom methods are available, the Digital Datcom output provides the longitudinal coefficients C_D, C_L, C_m, C_N, and C_A, and the derivatives

$$C_{L_\alpha}, C_{m_\alpha}, C_{Y_\beta}, C_{n_\beta}, C_{l_\beta}$$

Output for configurations with a wing and horizontal tail also includes downwash and the local dynamic-pressure ratio in the region of the tail. Subsonic data that include propeller power, jet power, or ground effects are also available. Power and ground effects are limited to the longitudinal aerodynamic characteristics.

Users are cautioned that the Datcom does not rigorously treat aerodynamics in the transonic speed regime, and a fairing between subsonic and supersonic solutions is often the recommended procedure. Digital Datcom uses linear and nonlinear fairings through specific points; however, the user may find another fairing more acceptable. The details of these fairing techniques are discussed in Volume II, Section 4. The partial output option, discussed in Section 3.5, permits the user to obtain the information necessary for transonic fairings. The experimental data input option allows the user to revise the transonic fairings on configuration components, perform parametric analyses on test configurations, and apply better method results (or data) for configuration build-up.

Datcom body aerodynamic characteristics can be obtained at all Mach numbers only for bodies of revolution. Digital Datcom can also provide subsonic longitudinal data for cambered bodies of arbitrary cross section as shown in Figure 6. The cambered body capability is restricted to subsonic longitudinal-stability solutions.

Straight-tapered and nonstraight-tapered wings including effects of sweep, taper, and incidence can be treated by the program. The effect of linear twist can be treated at subsonic Mach numbers. Dihedral influences are included in lateral-

directional stability derivatives and wing
wake location used in the calculation of longitudinal data. Airfoil section characteristics or a required input, although most of these characteristics may be generated using the Airfoil Section Module (Appendix B). Users are advised to be mindful of section characteristics which are sensitive to Reynolds number, particularly in cases where very low Reynolds number estimates are of interest. A typical example would be pretest estimates for small, laminar flow wind tunnels where Reynolds numbers on the order of 100,000 are common.

Users should be aware that the Datcom and Digital Datcom employ turbulent skin friction methods in the computation of friction drag values. Estimates for cases involving significant wetted areas in laminar flow will require adjustment by the user.

Computations of wing-body longitudinal characteristics assume, in many cases, that the configuration is of the mid-wing type. Lateral-directional analyses do account for other wing locations. Users should consult the Datcom for specific details.

Wing-body-tail configurations which may be addressed are shown in Table 2. These capabilities permit the user to analyze complete configurations, including canard and conventional aircraft arrangements. Component aerodynamic contributions and configuration build-up data are available through the use of the "BUILD" option described In Section 3.5. Using this option, the user can isolate component aerodynamic contributions in a similar fashion to break down data from a wind tunnel where. such information in of value in obtaining an overall understanding of a specific configuration.

Twin vertical panels can be placed either on the wing or horizontal tail. Analysis can be performed with both twin vertical tail panels and a conventional vertical tail specified though interference effects between the three panels is not computed. The influence of twin vertical tails is included only in the lateral-directional stability characteristics at subsonic speeds.

2.2.2 Dynamic Stability Characteristics

The pitch, acceleration, roll and yaw derivatives of

$$C_{L_q}, C_{m_q}, C_{L_{\dot{\alpha}}}, C_{m_{\dot{\alpha}}}, C_{l_p}, C_{Y_p}, C_{n_p}, C_{n_r}, \text{and } C_{l_r}$$

are computed for each component and the build-up configurations shown in Table 2. All limitations discussed in Section 7 of the USAF Stability and Control Datcom are applicable to digital Datcom as well. The experimental data option of the program (Section 4.5) permits the user to substitute experimental data for key parameters involved in dynamic derivative solutions, such as body $dC_L/d\alpha$ and wing-body $dC_L/d\alpha$. Any improvement in the accuracy of these key parameters will

produce significant improvement in the dynamic stability estimates. Use of experimental data substitution for this purpose is strongly recommended.

2.2.3 High-Lift and Control Characteristics

High-lift devices that can be analyzed by the Datcom methods include jet flaps, split, plain, single-slotted, double-slotted, fowler, and leading edge flaps and slats. Control devices, such as trailing-edge flap-type controls and spoilers, can also be treated. In general terms, the program provides the incremental effects of high lift or control device deflections at zero angle of attack.

The majority of the high-lift-device methods deal with subsonic lift, drag, and pitching-moment effects with flap deflection. General capabilities for jet flaps, symmetrically deflected high-lift devices, or trailing-edge control devices include lift, moment, and maximum-lift increments along with drag-polar increments and hinge-moment derivatives. For translating devices the lift-curve slope is also computed. Asymmetrical deflection of wing control devices can be analyzed for rolling and yawing effectiveness. Rolling effectiveness may be obtained for all-movable differentially-deflected horizontal stabilizers. The speed regimes where these capabilities exist are shown in Table 3.

Control modes employing all-moving wing or tail surfaces can also be addressed with the program. This is accomplished by executing multiple cases with a variety of panel incidence angles.

2.2.4 Trim Option

Trim data can be calculated at subsonic speeds. Digital Datcom manipulates computed stability and control characteristics to provide trim output (static Cm= 0.0). The trim option is available in two modes. One mode treats configurations with a trim control device on the wing or horizontal tail. Output is presented as a function of angle of attack and consists of control deflection angles required to trim and the associated longitudinal aerodynamic characteristics shown in Table 3. The second mode treats conventional wing-body-tail configurations where the horizontal-tail is all-movable or “flying.” In this case, output as a function of angle of attack consists of horizontal-stabilizer deflection (or incidence) angle required to trim; untrimmed stabilizer C_L, C_D, C_m, and hinge-moment coefficients; trimmed stabilizer C_L, C_D, and hinge moment coefficients; and total wing-body-tail C_L and C_D. Body-canard-tail configurations may be trimmed by calculating the stability characteristics at a variety of canard incidence angles and manually calculating the trim data. Treatment of a canard configuration is addressed in Table 1.

TABLE 3 HIGH LIFT/CONTROL DEVICE OUTPUT

SPEED REGIME CODE 1 = Subsonic 2 = Transonic 3 = Supersonic

Control Device	ΔC_L*	ΔC_m	ΔC_{D_i}	$\Delta C_{L_{max}}$	$(C_{L_\alpha})_\delta$	$\Delta C_{D_{min}}$	C_{ℓ_W}	C_{n_W}	$C_{\ell_{HT}}$	C_{h_α}*	C_{h_δ}*
Jet Flaps											
Pure Jet Flap	1	1		1	1						
Jet Flap & Mech. Flap	1	1		1	1						
IBF	1	1		1	1						
EBF	1	1		1	1						
Flaps											
Plain	1 2 3	1 3	1	1		1				1 3	1 3
Single Slotted	1 2	1	1	1	1 2 3	1					
Fowler Slotted	1 2	1	1	1	1 2 3						
Double Slotted	1 2	1	1	1	1 2 3					1	1
Split	1 2	1	1								
Leading Edge	1 2	1	1								
Krueger	1 2	1			1 2 3						
Slats											
Leading Edge	1 2	1			1 2 3						
Spoilers											
Plug							1 2 3	1 3			
Flap							1 2 3	1 3			
Slotted							1 2	1			
Differential δ											
Horizontal Tails									1 2 3		
Wing Ailerons							1 2 3	1 2 3			

Notes: *In addition to straight-tapered planforms, output also available on non-straight-tapered planforms (e.g., double delta).

Ailerons are identified as plain flaps in program.

IBF - Internally blown flap EBF - Externally blown flap

W - Wing HT - Horizontal tail

2.3 SPECIAL CONFIGURATION DATA

The capabilities discussed below apply to the three special configurations illustrated in Figure 2.

2.3.1 Low-Aspect-Ratio Wings and Wing-Body Combinations

Datcom provides methods which apply to 1ifting reentry vehicles at subsonic speeds. Digital Datcom output provides longitudinal coefficients C_D, C_L, C_m, C_N, and C_A and the derivatives

$$C_{L_\alpha}, C_{m_\alpha}, C_{Y_\beta}, C_{n_\beta}, C_{l_\beta}$$

2.3.2 Aerodynamic Control at Hypersonic Speeds

The USAF Stability and Control Datcom contains some special control methods for high-speed vehicles. These include hypersonic flap methods which are incorporated into Digital Datcom. The flap methods are restricted to Mach numbers greater than 5, angles of attack between zero and 20 degrees and deflections into the wind. A two-dimensional flow field is determined and oblique shock relations are used to describe the flow field.

Data output from the hypersonic control-flap methods are incremental normal- and axial-force coefficients, associated hinge moments, and center-of-pressure location. These data are found from the local pressure distributions on the flap and in regions forward of the flap. The analysis includes the effects of flow separation due to windward flap deflection by providing estimates for separation induced-pressures forward of the flap and reattachment on the flap, Users may specify laminar or turbulent boundary layers.

2.3.3 Transverse-jet Control Effectiveness

Datcom provides a procedure for preliminary sizing of a two-dimensional transverse-jet control system in hypersonic flow, assuming that the nozzle is located at the aft end of the surface. The method evaluates the interaction of the transverse jet with the local flow field. A favorable interaction will produce amplification forces that increase control effectiveness.

The Datcom method is restricted to control jets located on windward surfaces in a Mach number range of 2 to 20. In addition, the method is invalid for altitudes where mean free paths approach the jet-width dimension.

The transverse control jet method requires a user-specified time history of local flow parameters and control force required to trim or maneuver. With these data, the minimum jet plenum pressure is then employed to calculate the nozzle throat diameter and the jet plenum pressure and propellant weight requirements to trim or maneuver the vehicle.

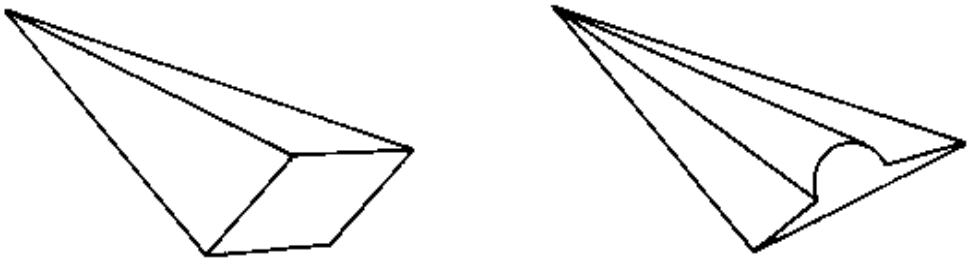

LOW ASPECT RATIO WINGS/WING BODY COMBINATIONS

HYPERSONIC FLAP

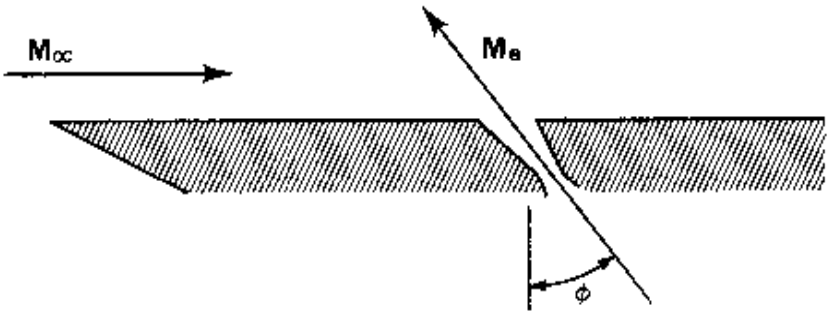

TRANSVERSE JET

FIGURE 2 SPECIAL CONFIGURATIONS

2.4 OPERATIONAL CONSIDERATIONS

There are several operational considerations the user needs to understand in order to take maximum advantage of Digital Datcom.

2.4.1 Flight Condition Control

Digital Datcom requires Mach number and Reynolds number to define the flight conditions. This requirement can be satisfied by defining combinations of Mach number, velocity, Reynolds number, altitude, and pressure and temperature. The input options for speed reference and atmospheric conditions that satisfy the requirement are given in Figure 3, The speed reference is input as either Mach number or velocity, and the atmospheric conditions as either altitude or freestream pressure and temperature. The specific reference and atmospheric conditions are then used to calculate Reynolds number.

The program may loop on speed reference and atmospheric conditions three different ways, an given by the variable LOOP in Figure 3. In this discussion, and in Figure 3, the speed reference is referred to as Mach number, and atmospheric conditions as altitude. The three options for program looping on Mach number and altitude are listed and discussed below.

- LOOP = 1 - Vary Mach and altitude together. The program executes at the first Mach number and first altitude, the second Mach number and second altitude, and continues for all the flight conditions. In the input data, NMACH must equal NALT and NMACH flight conditions are executed. This option should be selected when the Reynolds number is input, and must be selected when atmospheric conditions are not input.
- LOOP = 2 - Vary Mach number at fixed altitude. The program executes using the first altitude and cycles through each Mach number in the input list, the second altitude and cycles through each Mach number, and continues until each altitude has been selected. Atmospheric conditions oust be input for this option and NMACH times NALT flight conditions are executed.
- LOOP = 3 - Vary altitude at fixed Mach number. The program executes using the first Mach number and cycles through each altitude in the input list, the second Mach number and cycles through each altitude. and continues until each Mach number has been selected. Atmospheric conditions must be input for this option and NMACH times NALT flight conditions are executed.

2.4.2 Mach Regimes

Aerodynamic stability methods are defined in Datcom as a function of vehicle

configuration and Mach regime. Digital Datcom logic determines the configuration being analyzed by identifying the particular input namelists that are present within a case (see Section 3). The Mach regime is normally determined according to the following criteria:

Mach Number (M)	Mach Regime
$M < 0.6$	Subsonic
$0.6 < M < 1.4$	Transonic
$M > 1.4$	Supersonic
$M > 1.4$ and the hypersonic flag is set (see Figure 3)	Hypersonic

These limits were selected to conform with most Datcom methods. However, some methods are valid for a larger Mach number range. Some subsonic methods are valid up to a Mach number of 0.7 or 0.8. The user has the option to increase the subsonic Mach number limit using the variable STMACH described In Section 3.2. The program will permit this variable to be in the range: $0.6 \leq STMACH \leq 0.99$. In the same fashion, the supersonic Mach limit can be reduced using the variable TSMACH. The program will permit this value be in the range: $1.01 \leq TSMACH \leq 1.40$. The program will default to the limits of each variable if the range is exceeded. The Mach regimes are then defined as follows:

Mach Number (M)	Mach Regime
$M < STMACH$	Subsonic
$STMACH < M < TSMACH$	Transonic
$M > TSMACH$	Supersonic
$M > TSMACH$ and the hypersonic flag is set	Hypersonic

2.4.3 Input Diagnostics

There to an input diagnostic analysis module in Digital Datcom which scans all of the input data cards prior to program execution. A listing of all input data is given and any errors are flagged. It checks all namelist cards for correct namelist name and variable name spelling, checks the numerical inputs for syntax errors, and checks for legal control cards. The namelist and control cards are described in Section 3.

This module does not “fix up” input errors. It will, however, insert a namelist termination if it is not found. Digital Datcom will attempt to execute all cases as input by the user even if errors are detected.

2.4.4 Airfoil Section Module

The airfoil section module can be used to calculate the required geometric and. aerodynamic input parameters for virtually any user defined airfoil section. This module substantially simplifies the user's input preparation.
An airfoil section is defined by one of the following methods:

1. An airfoil section designation (for NACA, double wedge, circular arc, or hexagonal airfoils)
2. Section upper and lower cartesian coordinates, or
3. Section mean line and thickness distribution.

The airfoil section module uses Weber's method (References 2 to 4) to calculate the inviscid aerodynamic characteristics. A viscous correction is applied to the section lift curve slope, cg . In addition a 5% correlation factor (suggested in Datcom, page 4.1.1.2-2) is applied to bring the results in line with experimental data. The airfoil section module methods are discussed in Appendix A.
The airfoil section is assumed to be parallel to the free stream. Skewed airfoils can be handled by supplying the section coordinates parallel to the free stream. The module will calculate the characteristics of any input airfoil, so the user must determine whether the results are applicable to his particular situation. Five general characteristics of the module should be noted.

1. For subsonic Mach numbers, the module computes the airfoil subsonic section characteristics and the results can be considered accurate for Mach numbers less than the crest critical Mach number. Near crest critical Mach number, flow mixing due to the upper surface shock will make the boundary layer correction invalid. Compressibility corrections also become invalid. The module also computes the required geometric variables at all speeds, and for transonic and supersonic speeds these are the only required inputs. Mach equals zero data are always supplied.
2. Because of the nature of the solution, predictions for an airfoil whose maximum camber is greater than 6% of the chord will lose accuracy. Accuracy will also diminish when the maximum airfoil thickness exceeds approximately 12% of the chord, or large viscous interactions are present such as with supercritical airfoils.
3. When section cartesian coordinates or mean line and thickness distribution coordinates are specified, the user must adequately define the leading edge region to prevent surface curve fits that have infinite slope. This can be accomplished by supplying section ordinates at non-dimensional chord stations (x/c of 0.0, 0.001, 0.002, and 0.003.
4. If the leading edge radius is not specified in the airfoil section input, the user must insure that the first and second coordinate points lie on the leading edge radius. For sharp nosed airfoils the user must specify a zero

leading edge radius.

5. The computational algorithm can be sensitive to the “smoothness” of the input coordinates. Therefore, the user should insure that the input data contains no unintentional fluctuations. Considering that Datcom procedures are preliminary design methods, it is at least as important to provide smoothly varying coordinates. as it is to accurately define the airfoil geometry.

2.4.5 Operational Limitations

Several operational limitations exist in Digital Datcom. These limitations are listed below without extensive discussion or justification. Some pertinent operational techniques are also listed.

- The forward lifting surface is always input as the wing and the aft lifting surface as the horizontal tail. This convention is used regardless of the nature o! the configuration.
- Twin vertical tail methods are only applicable to lateral stability parameters at subsonic speeds.
- Airfoil section characteristics are assumed to be constant across the airfoil span, or an average for the panel. Inboard and outboard panels of cranked or double-delta planforms can have their individual panel leading edge radii and maximum thickness ratios specified separately.
- If airfoil sections are simultaneously specified for the same aerodynamic surface by an NACA designation and by coordinates, the coordinate information will take precedence.
- Jet and propeller power effects are only applied to the longitudinal stability parameters at subsonic speeds. Jet and propeller power effects cannot be applied simultaneously.
- Ground effect methods are only applicable to longitudinal stability parameters at subsonic speeds.
- Only one high lift or control device can be analyzed at a time. The effect of high lift and control devices on downwash is not calculated. The effects of multiple devices can be calculated by using the experimental data input option to supply the effects of one device and allowing Digital Datcom to calculate the incremental effects of the second device.
- Jet flaps are considered to be symmetrical high lift and control devices. The methods are only applicable to the longitudinal stability parameters at subsonic speeds.
- The program uses the input namelist names to define the configuration components to be synthesized. For example, the presence of namelist

HTPLNF causes Digital Datcom to assume that the configuration has a horizontal tail.

Should Digital Datcom not provide output for those configurations for which output is expected, as shown in Table 2, limitations on the use of a Datcom method has probably been exceeded. In all cases users should consult the Datcom for method limitations.

SECTION 3

DEFINITION OF INPUTS

The Digital Datcom basic input data unit is the “case.” A “case” is a set of input data that defines a configuration and its flight conditions. The case consists of inputs from up to four data groups.

- Group I inputs define the flight conditions and reference dimensions.
- Group II inputs specify the basic configuration geometry for conventional configurations, defining the body, wing and tail surfaces and their relative locations.
- Group III inputs specify additional configuration definition, such as engines, flaps, control tabs, ground effects or twin vertical panels. This input group also defines those “special” configurations that cannot be described using Group II inputs and include low aspect ratio wing and wing-body configurations, transverse jet control and hypersonic flaps.
- Group IV inputs control the execution of the case, or job for multiple cases, and allow the user to choose some of the special options, or to obtain extra output.

3.1 INPUT TECHNIQUE

Two techniques are generally available for introducing input data into a Fortran computer program: namelist and fixed format. Digital Datcom employs the namelist input technique for input Groups I, II and III since it is the most convenient and flexible for this application. Its use reduces the possibility of input errors and increases the utility of the program as follows:

- Variables within a namelist may be input in any order;
- Namelist variables are not restricted to particular card columns;
- Only required input variables need be included; and
- A variable may be included more than once within a namelist, but the last value to appear will be used.

Namelist rules used In the program and applicable to CDC and IBM systems are presented In Appendix A. The user should adhere to them when preparing inputs for Digital Datcom. To aid the user in complying with the general namelist rules, examples of both correct and incorrect namelist coding are included in Appendix A.

All namelist input variables (and program data blocks) are initialized “UNUSED”

(1.0E-60 on CDC systems) prior to case execution. Therefore, omission of pertinent input variables may result in the “UNUSED” value to be used in calculations. However, the “UNUSED” value is often used as a switch for program control, so the user should not indiscriminately use dummy inputs.
All Digital Datcom numeric constants require a decimal point. The Fortran variable names that are implied INTEGERS (name begins with I, J, K, L, M, or N) are declared REAL and must be specified in either “E” or “F” format (X.XXXEYY or X.XXX).
Group IV inputs are the “case control cards.” Though they are input in a fixed format, their use has the characteristic of a namelist. since (with the exception of the case termination card) they can be placed in any order or location in the input data. Descriptions and limitations of each of the available control cards are discussed in Section 3.5.
Table 4 defines the namelists and control cards that can be input to the program. Since not all namelist inputs are required to define a particular problem or configuration, those namelists required for various analyses are summarized in Tables 5 through 7. Use of these tables will save time in preparing namelist inputs for a specific problem.
The user has the option to specify the system of units to be used, English or Metric. Table 8 summarizes the systems available, and defines the case control card required to invoke each option. For clarity, the namelist variable description charts which follow have a column titled “Units” using the following nomenclature:

l	denotes units of length: feet, inches, meters, or centimeters
A	denotes units of area: ft^2, in^2, m^2, or cm^2
Deg	denotes angular measure in degrees, or temperature in degrees Rankine or degrees Kelvin
F	denotes units of force; pounds or Newtons
t	denotes units of time; seconds.

Specific input parameters, geometric illustrations, and supporting data are provided throughout the report. To aid the user in reading these figures, the character ‘0' defines the number zero and the character ‘O’ the fifteenth letter in the alphabet.

TABLE 4: DIGITAL DATCOM INPUT SUMMARY

GROUP I		GROUP II		GROUP III		GROUP IV	
NAMELIST INPUT						CONTROL CARD INPUT	
REFERENCE DATA DEFINITION		BASIC CONFIGURATION DEFINITION		ADDITIONAL/SPECIAL CONFIGURATION DEFINITION		JOB CONTROL CARDS	
NAMELIST NAME	PAGE DEFINED	NAMELIST NAME	PAGE DEFINED	NAMELIST NAME	PAGE DEFINED	CONTROL CARD NAME	PAGE DEFINED
FLTCØN	27	SYNTHS	33	PRØPWR	49	NAMELIST	73
ØPTINS	29	BØDY	35	JET PWR	51	SAVE	73
		WGPLNF	37	GRNDEF	53	DIM	73
		HTPLNF	37	TVTPAN	55	NEXT CASE	73
		VTPLNF	37	SYMFLP	57	TRIM	73
		VFPLNF	37	ASYFLP	61	DAMP	74
		WGSCHR	39	LARWB	63	NACA	74
		HTSCHR	39	TRNJET	65	CASEID	75
		VTSCHR	39	HYPEFF	67	DUMP	75
		VFSCHR	39	CØNTAB	69	DERIV	75
		EXPR – –	45			PART	77
						BUILD	77
						PLØT	77

TABLE 5
REQUIRED NAMELISTS FOR ANALYSIS OF BASIC CONFIGURATIONS

(1) USE OF THIS NAMELIST IS OPTIONAL EXCEPT WHEN CONFIGURATION IS BODY ALONE
(2) OPTIONAL, NOT REQUIRED
(3) OPTIONAL IF NACA CONTROL CARD IS USED

REQUIRED NAMELIST / BASIC CONFIGURATION*	FLTCØN	ØPTINS (1)	SYNTHS	BØDY	WGPLNF	HTPLNF	VTPLNF	VFPLNF	WGSCHR (3)	HTSCHR (3)	VTSCHR (3)	VFSCHR (3)	EXPR- (2)
BODY ALONE	●	●	●	●									●
WING ALONE	●	●	●		●				●				●
HORIZONTAL TAIL ALONE	●	●	●			●				●			●
VERTICAL TAIL AND VENTRAL FIN ALONE	●	●	●				●	●			●	●	●
BODY–WING	●	●	●	●	●				●				●
BODY–HORIZONTAL	●	●	●	●		●				●			●
BODY–VERTICAL–VENTRAL	●	●	●	●			●	●			●	●	●
BODY–WING–HORIZONTAL	●	●	●	●	●	●			●	●			●
BODY–WING–VERTICAL–VENTRAL	●	●	●	●	●		●	●	●		●	●	●
BODY–WING–HORIZONTAL–VERTICAL–VENTRAL	●	●	●	●	●	●	●	●	●	●	●	●	●

*NOTE 1) MAXIMUM OF 2 LIFTING SURFACES (CANARDS OR CONVENTIONAL)
2) HIGH LIFT OR CONTROL DEVICES NEUTRAL
3) CLEAN BODIES E.G., NO DUCTS
4) NO EFFECT OF ENGINE POWER OR GROUND PROXIMITY

TABLE 6
NAMELISTS REQUIRED FOR ADDITIONAL ANALYSIS OF BASIC CONFIGURATIONS

REQUIRED NAMELIST / ADDITIONAL ANALYSIS	PROPWR	JETPWR	GRNDEF	TVTPAN	SYMFLP	ASYFLP	APPLICABLE CONFIGURATIONS*						
	SUBSONIC ONLY						W	B+W	B+W+V	B+W+F	B+W+H	B+W+H +V	B+W+H +V+F
PROPELLER POWER	●							●	●	●	●	●	●
JET POWER		●						●	●	●	●	●	●
GROUND EFFECTS			●					●	●	●	●	●	●
TWIN VERTICAL TAIL				●				●	●	●	●	●	●
SYMMETRICAL FLAP ON WING					●		●	●	●	●			
SYMMETRICAL FLAP ON HORIZONTAL TAIL					●						●	●	●
ASYMMETRICAL FLAP ON WING						●	●	●	●	●			
ASYMMETRICAL FLAP ON HORIZONTAL TAIL						●					●	●	●
JET FLAP ON WING		●			●		●	●	●	●	●	●	●

*NOTE CONFIGURATION CODES: W – WING ALONE
B+W – WING–BODY
B+W+V – WING–BODY–VERTICAL
B+W+F – WING–BODY–VENTRAL FIN
B+W+H – WING–BODY–HORIZONTAL
B+W+H+V – WING–BODY–HORIZONTAL–VERTICAL
B+W+H+V+F – WING–BODY–HORIZONTAL–VERTICAL–VENTRAL FIN

TABLE 7
REQUIRED NAMELIST FOR ANALYSIS OF SPECIAL CONFIGURATIONS

SPECIAL CONFIGURATION \ REQUIRED NAMELIST	FLTCØN	LARWB	TRNJET	HYPEFF
LOW ASPECT RATIO WING & WING BODY (SUBSONIC)	●	●		
FLAT PLATE WITH TRANSVERSE JET (HYPERSONIC)	●		●	
FLAT PLATE WITH FLAP CONTROL (HYPERSONIC)	●			●

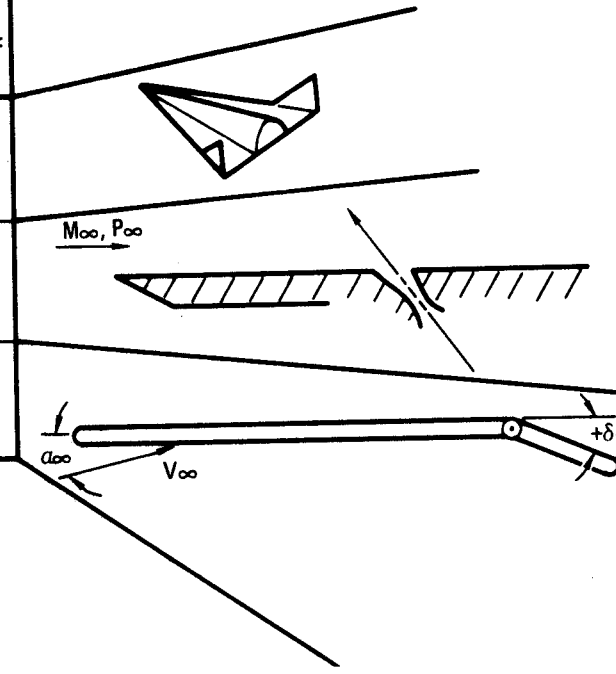

TABLE 8 INPUT UNIT OPTIONS

UNITS SYSTEM (LENGTH-FORCE-TIME, ℓ-F-T)	CONTROL CARD	GEOMETRY UNITS (ℓ)	SURFACE ROUGHNESS RØUGFC	PRESSURE P_∞ (F/A)	TEMPERATURE T_∞ (DEG)	REYNOLDS NUMBER PER UNIT LENGTH
FOOT-POUND-SECOND	DIM FT	FOOT	INCH	lb/ft^2	^oR	1/FT
INCH-POUND-SECOND	DIM IN	INCH	INCH	lb/in^2	^oR	1/FT
METER-NEWTON-SECOND	DIM M	METER	CM	N/M^2	^oK	1/M
CENTIMETER-NEWTON-SECOND	DIM CM	CM	CM	N/CM^2	^oK	1/M

THE DEFAULT SYSTEM OF UNITS IS THE FOOT-POUND-SECOND

3.2 GROUP I INPUT DATA

Namelist input data to define the case flight conditions and reference dimensions are shown in Figures 3 and 4.

Namelist FLTCON, Figure 3, defines the case flight conditions. The user may opt to provide Mach number and Reynolds number per unit length for each case to be computed. In this case, input preparation requires that the user compute Reynolds number for each Mach number, and altitude combination he desires to run. However, the program has a standard atmosphere model, which accurately simulates the 1962 Standard Atmosphere for geometric altitudes from -16,404 feet to 2,296,588 feet, that can be used to eliminate the Reynolds number input requirement and provides the user the option to employ Mach number or velocity as the flight speed reference. The user may specify Mach numbers (or velocities) and altitudes for each case and program computations will employ the atmosphere model to determine pressure, temperature, Reynolds number and other required parameters to support method applications.

Also incorporated is the provision for optional inputs of pressure and temperature by the user. The program will override the standard atmosphere and compute flow condition parameters consistent with the pressure and temperature inputs. This option will permit Digital Datcom applications such as wind tunnel model analyses at test section conditions.

The five input combinations which will satisfy the Mach number and Reynolds number requirements are summarized in Figure 3. If the NACA control card is used. the Reynolds number and Mach number must be defined using the variables RNNUB and MACH.

Other optional inputs include vehicle weight and flight path angle (“WT” and “GAMMA”). These parameters are of particular interest when using the Trim Option (Section 3.5). The trim flight conditions are output as an additional line of output with the trim data and the steady flight lift coefficient is output with the untrimmed data.

Use of the variable LOOP enables the user to run cases at fixed altitude with varying Mach number (or velocity), at fixed Mach number (or velocity) at varying altitudes, or varying speed and altitude together.

Nondimensional aerodynamic coefficients generated by Digital Datcom may be based on user-specified reference area and lengths. These reference parameters are input via namelist OPTINS, Figure 4. If the reference area is not specified, it is set equal to the theoretical planform area of the wing. This wing area includes the fuselage area subtended by the extension of the wing leading and trailing edges to the body center line. The longitudinal reference length, if not specified in OPTINS, in set equal to the theoretical wing mean aerodynamic chord. The lateral

reference length is set equal to the wing span when it is not user specified. Reference parameters contained in OPTINS must be specified for body-alone configurations since the default reference parameters are based on wing geometry. It is suggested that values near the magnitude of body maximum cross-sectional area be used for the reference area and body maximum diameter for the longitudinal and lateral reference lengths.

The output format generally provides at least three significant digits in the solution when user specified reference parameters are of the same order of magnitude as the default reference parameters. If the user specifies reference parameters that are orders of magnitude different from the wing area or aerodynamic chord, some output data can overflow the output format or print only zeros. This may happen in rare instances and would require readjustment of the reference parameters.

NAMELIST FLTCØN

VARIABLE NAME	ARRAY DIMENSION	DEFINITION	UNITS
NMACH	–	NUMBER OF MACH NUMBERS OR VELOCITIES TO BE RUN, MAXIMUM OF 20	–
MACH	20	VALUES OF FREESTREAM MACH NUMBER	–
VINF	20	VALUES OF FREESTREAM SPEED	ℓ/t
NALPHA	–	NUMBER OF ANGLES OF ATTACK TO BE RUN, MAXIMUM OF 20	–
ALSCHD	20	VALUES OF ANGLES OF ATTACK, TABULATED IN ASCENDING ORDER	DEG
RNNUB (2)	20	REYNOLDS NUMBER PER UNIT LENGTH, $\rho V/\mu$	$1/\ell$ (3)
NALT (6)	–	NUMBER OF ATMOSPHERIC CONDITIONS TO BE RUN, MAXIMUM OF 20	–
ALT (6)	20	VALUES OF GEOMETRIC ALTITUDES	ℓ
PINF (1) (6)	20	VALUES OF FREESTREAM STATIC PRESSURE	F/A
TINF (6)	20	VALUES OF FREESTREAM TEMPERATURE	DEG
HYPERS	–	= .TRUE. HYPERSONIC ANALYSIS AT ALL MACH NUMBERS $\geqslant$ 1.4	–
STMACH	–	UPPER LIMIT OF MACH NUMBERS FOR SUBSONIC ANALYSIS (0.6 $\leqslant$ STMACH $\leqslant$ 0.99). DEFAULT TO 0.6 IF NOT INPUT	–
TSMACH	–	LOWER LIMIT OF MACH NUMBERS FOR SUPERSONIC ANALYSIS (1.01 $\leqslant$ TSMACH $\leqslant$ 1.4). DEFAULT TO 1.4 IF NOT INPUT	–
TR	–	DRAG DUE TO LIFT TRANSITION FLAG, FOR REGRESSION ANALYSIS OF WING – BODY CONFIGURATIONS = 0.0 FOR NO TRANSITION, DEFAULT = 1.0 FOR TRANSITION STRIPS OR FULL SCALE FLIGHT.	–
WT	–	VEHICLE WEIGHT	F
GAMMA	–	FLIGHT PATH ANGLE	DEG
LØØP (7)	–	PROGRAM LOOPING CONTROL = 1 VARY ALTITUDE AND MACH TOGETHER, DEFAULT = 2 VARY MACH, AT FIXED ALTITUDE = 3 VARY ALTITUDE, AT FIXED MACH	–

FIGURE 3 INPUT FOR NAMELIST FLTCØN – FLIGHT CONDITIONS

INPUT OPTIONS TO SATISFY THE MACH NUMBER 7
AND REYNOLDS NUMBER INPUT REQUIREMENTS

USER INPUT	PROGRAM COMPUTES 5
4 MACH, RNNUB	
MACH, ALT	PINF, TINF, RNNUB
VINF, ALT	PINF, TINF, MACH, RNNUB
PINF, TINF, VINF	RNNUB, MACH
PINF, TINF, MACH	RNNUB, VINF

1 REQUIRED FOR TRANSVERSE-JET CONTROL

2 EACH ARRAY ELEMENT MUST CORRESPOND TO THE RESPECTIVE MACH NUMBER/FREESTREAM SPEED INPUT, USE LØØP = 1.

3 UNITS ARE EITHER 1/FT OR 1/M AS DEFINED IN TABLE 8

4 REQUIRED WHEN USING THE NACA CONTROL CARD

5 USER INPUTS FOR THESE VARIABLES WILL TAKE PRECEDENCE

6 ATMOSPHERIC CONDITIONS ARE INPUT AS EITHER ALTITUDE OR PRESSURE AND TEMPERATURE

7 SEE SECTION 2.4.1, AND EXAMPLE PROBLEM 2 IN SECTION 7

NAMELIST ØPTINS

VARIABLE NAME	ARRAY DIMENSION	DEFINITION	UNITS
RØUGFC	–	SURFACE ROUGHNESS FACTOR, EQUIVALENT SAND ROUGHNESS. DEFAULT TO 0.16×10^{-3} INCHES, OR 0.406×10^{-3} cm, IF NOT INPUT	ℓ*
SREF	–	REFERENCE AREA. VALUE OF THEORETICAL WING AREA USED BY PROGRAM IF NOT INPUT	A
CBARR	–	LONGITUDINAL REFERENCE LENGTH VALUE OF THEORETICAL WING MEAN AERODYNAMIC CHORD USED BY PROGRAM IF NOT INPUT	ℓ
BLREF	–	LATERAL REFERENCE LENGTH VALUE OF WING SPAN USED BY PROGRAM IF NOT INPUT	ℓ

*UNITS ARE EITHER INCHES OR CENTIMETERS AS DEFINED IN TABLE 8

ROUGHNESS FACTORS FOR USE IN NAMELIST ØPTINS

TYPE OF SURFACE	EQUIVALENT SAND ROUGHNESS	
	INCHES	cm
AERODYNAMICALLY SMOOTH	0	0
POLISHED METAL OR WOOD	$0.02 - 0.08 \times 10^{-3}$	$0.051 - 0.203 \times 10^{-3}$
NATURAL SHEET METAL	0.16×10^{-3}	0.406×10^{-3}
SMOOTH MATTE PAINT, CAREFULLY APPLIED	0.25×10^{-3}	0.635×10^{-3}
STANDARD CAMOUFLAGE PAINT, AVERAGE APPLICATION	0.40×10^{-3}	1.016×10^{-3}
CAMOUFLAGE PAINT, MASS-PRODUCTION SPRAY	1.20×10^{-3}	3.048×10^{-3}
DIP-GALVANIZED METAL SURFACE	6×10^{-3}	15.240×10^{-3}
NATURAL SURFACE OF CAST IRON	10×10^{-3}	25.400×10^{-3}

FIGURE 4 INPUT FOR NAMELIST ØPTINS – REFERENCE PARAMETERS

NOTE: The INERTA namelist is a new addition to the Digital Datcom program, added by Holy Cows, Inc. in May 2011. As such, this namelist will not be recognized by other versions of the Digital Datcom program. These parameters are strictly passed through the Digital Datcom program into the JSBSim output file generated by ***Datcom+ Pro***, to allow the JSBSim model files generated by ***Datcom+ Pro*** to be executed without additional inputs.

Figure 4A INERTA inputs

Variable Name	**Array Dimension**	**Definition**	**Units**
IXX	-	Ixx Moment of Inertia	mass · length^2
IYY	-	Iyy Moment of Inertia	mass · length^2
IZZ	-	Izz Moment of Inertia	mass · length^2
IXY	-	Ixy Cross Product of Inertia (usually insignificant)	mass · length^2
IXZ	-	Ixz Cross Product of Inertia	mass · length^2
IYZ	-	Iyz Cross Product of Inertia (usually insignificant)	mass · length^2
NFUELT	-	Number of fuel tanks, maximum of 10	-
XFUELT	10	X location of fuel tanks, maximum of 10 values	length
YFUELT	10	Y location of fuel tanks, maximum of 10 values	length
ZFUELT	10	Z location of fuel tanks, maximum of 10 values	length
FUELRD	10	Effective fuel tank radius, maximum of 10 values	length
FUELCP	10	Fuel tank maximum quantity, maximum of 10 values	weight
FUELQT	10	Fuel tank current quantity, maximum of 10 values	weight
ACTYPE	-	Not required if IXX, IYY, and IZZ are known. This tells the inertia estimation equations how to calculate the inertias. **Aircraft type**: 0 - Glider 1 - Light Single 2 - Light Twin 3 - WW II Fighter (or subsonic Racer/aerobatic) 4 - Single-Engine Transonic of Supersonic Fighter 5 - Two-Engine Transonic or Supersonic Fighter 6 - Two-Engine Transonic Transport 7 - Three-engine Transonic Transport 8 - Four+-engine Transonic Transport 9 - Multi-engine Prop Transport If no aircraft type is entered and primary moments of inertia are not present, the program will attempt to guess which aircraft type to use.	-
METHOD	-	Estimation method 1 - Roskam equations, also used in Aeromatic (default)	-

3.3 GROUP II INPUT DATA

Namelist data to define basic configuration geometry is shown in Figures 5 through 8. Those "special" configurations (Figure 2) are defined using Group III namelists.

The namelist SYNTHS defines the basic configuration synthesis parameters. The user has the option to apply a scale factor to his geometry which permits full scale configuration dimensions to be input for an analysis of a wind tunnel model. The program will use the scale factor to scale the input data to model dimensions. The variable used is "SCALE."

The body configuration is defined using the namelist BODY (Figure 6). The variable METHOD enables the user to select either the traditional Datcom methods for body C_L, C_m and C_D at low angles of attack (default), or Jorgensen's method, which is applicable from zero to 180 degrees angle of attack. Jorgensen's method can be used by selecting "METHOD=2" subsonically or supersonically. Users are encouraged to consult the Datcom for details concerning these methods. Digital Datcom will accept an arbitrary origin for the body coordinate system, i.e., body station "zero" is ~~or~~ required to be at the fuselage nose.

The planform geometry of each of the aerodynamic surfaces are input using the namelist WGPLNF, HTPLNF, VTPLNF and VFPLNF shown in Figure 7. The section aerodynamic characteristics for these surfaces are input using either the section characteristics namelists WGSCHR, HTSCHR, VTSCHR and VFSCHR (Figure 4) and/or the NACA control card discussed in Section 3.5. Airfoil characteristics are assumed constant for each panel of the planform.

The USAF Datcom contains three methods for the computation of forward lifting surface downwash field effects on aft lifting surface aerodynamics. They are given in detail in Section 4.4 of Datcom, and their regimes of primary applicability are summarized in Figure 9. The user is cautioned not to apply the empirically based subsonic Method 2 outside the bounds listed in Figure 9. Method 1 is recommended as an optional approach for the b_w/b_h regime of 1.0 to 1.5.

By default, Digital Datcom selects Method 3 for b_w/b_h less than 0.5 and Method 1 for span ratios greater than or equal to 1.5.

Using the variable DWASH In namelist WGSCHR, the user has the option of applying Method 1 or 2. Method 2 is applicable at subsonic Mach numbers and span ratios of 1.25 to 3.6.

Aspect ratio classification is required to employ the Datcom straight tapered wing solutions for wing or tail lift in the subsonic and transonic Mach regimes. Classification of lifting surface aspect ratio as either high or low results in the selection of appropriate methods for computation. The USAF Datcom uses a classification parameter, which depends upon planform taper ratio and leading

edge sweep (Table 9). It also notes an overlap regime where the user may employ either the low or high aspect ratio methods. Digital Datcom allows the user to specify the aspect ratio method to be used in this overlap regime using the parameter ARCL in the section namelists. High aspect ratio methods are automatically selected for unswept, untapered wings with aspect ratios of 3.5 or more if ARCL is not input.

Transonically, several parameters need to be defined to obtain the panel lift characteristics. Those required variables are summarized In Figures 10 and 11 and are input using the experimental data substitution namelist EXPRnn. Additionally, intermediate data may be available, for example $(dC_l/d\beta)/C_L$, which requires experimental data to complete. By use of the experimental data input namelist EXPRnn, data can be made available to complete these second-level computations. as shown in Figure 10.

The namelist EXPRnn can also be used to substitute selected configuration data with known test results for some Datcom method output and build a new configuration based on existing data. This option is most useful for theoretically expanding a wind tunnel test data base for analysis of non-tested configurations.

NAMELIST SYNTHS

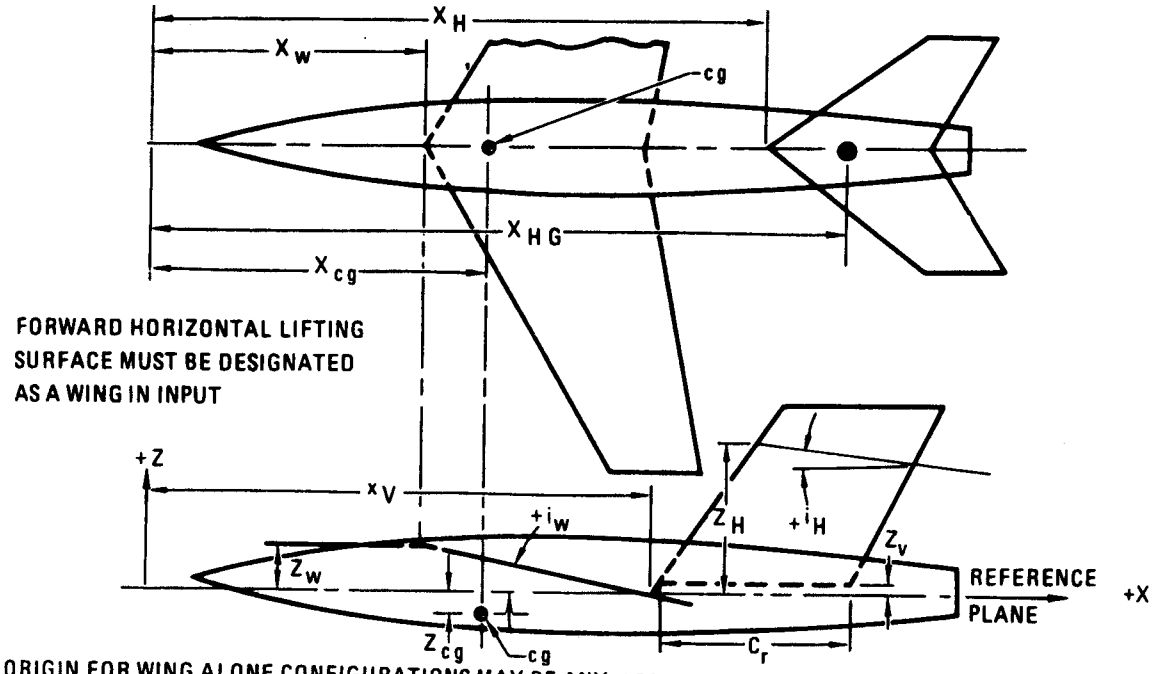

ORIGIN FOR WING ALONE CONFIGURATIONS MAY BE ANY ARBITRARY REFERENCE POINT.

(1) REQUIRED ONLY FOR ALL-MOVABLE HORIZONTAL TAIL TRIM OPTION.
(2) IF HINAX IS INPUT, X_H AND Z_H ARE EVALUATED AT ZERO INCIDENCE (i_W=0)

ENGINEERING SYMBOL	VARIABLE NAME	ARRAY DIMENSION	DEFINITION	UNITS
x_{cg}	XCG	–	LONGITUDINAL LOCATION OF CG, (MOMENT REF. CENTER)	ℓ
z_{cg}	ZCG	–	VERTICAL LOCATION OF CG RELATIVE TO REFERENCE PLANE	ℓ
x_W	XW	–	LONGITUDINAL LOCATION OF THEORETICAL WING APEX	ℓ
z_W	ZW	–	VERTICAL LOCATION OF THEORETICAL WING APEX RELATIVE TO REFERENCE PLANE	ℓ
i_W	ALIW	–	WING ROOT CHORD INCIDENCE ANGLE MEASURED FROM REFERENCE PLANE	DEG
(2) x_H	XH	–	LONGITUDINAL LOCATION OF THEORETICAL HORIZONTAL TAIL APEX	ℓ
(2) z_H	ZH	–	VERTICAL LOCATION OF THEORETICAL HORIZONTAL TAIL APEX RELATIVE TO REFERENCE PLANE	ℓ
i_H	ALIH	–	HORIZONTAL TAIL ROOT CHORD INCIDENCE ANGLE MEASURED FROM REFERENCE PLANE	DEG
x_V	XV	–	LONGITUDINAL LOCATION OF THEORETICAL VERTICAL TAIL APEX	ℓ
x_{V_F}	XVF	–	LONGITUDINAL LOCATION OF THEORETICAL VENTRAL FIN APEX	ℓ
z_V	ZV	–	VERTICAL LOCATION OF THEORETICAL VERTICAL TAIL APEX	ℓ
z_{V_F}	ZVF	–	VERTICAL LOCATION OF THEORETICAL VENTRAL TAIL APEX	ℓ
	SCALE	–	VEHICLE SCALE FACTOR (MULTIPLIER TO INPUT DIMENSIONS)	–
	VERTUP	–	VERTUP = .TRUE. VERTICAL PANEL ABOVE REF PLANE (DEFAULT)	–
		–	VERTUP = .FALSE. VERTICAL PANEL BLEOW REF PLANE	–
(1) x_{HG}	HINAX	–	LONGITUDINAL LOCATION OF HORIZONTAL TAIL HINGE AXIS	ℓ

FIGURE 5 INPUT FOR NAMELIST SYNTHS – SYNTHESIS PARAMETERS

Additions to Figure 5

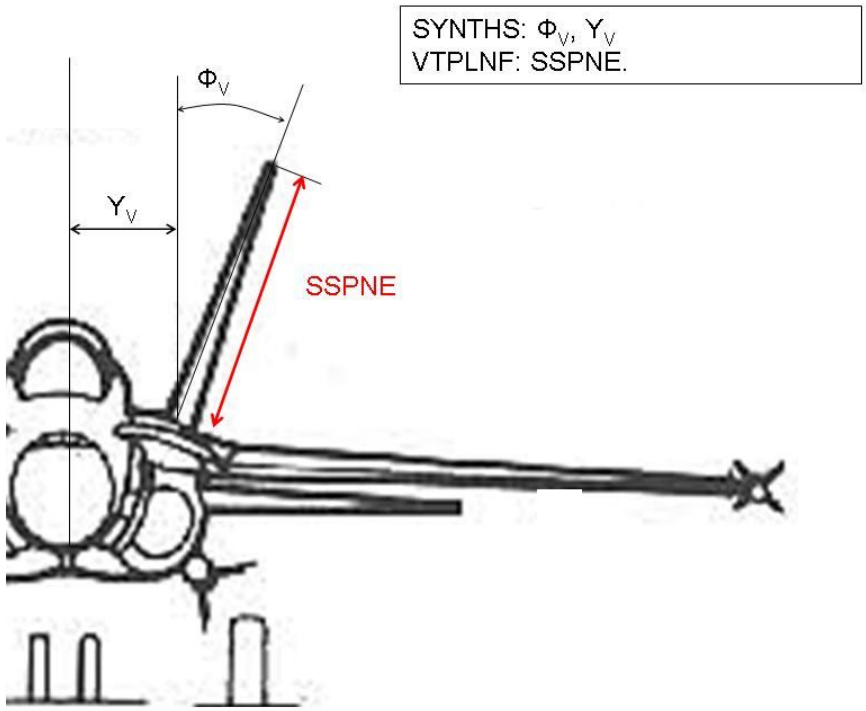

Figure 5a - Vertical Stabilizer terms

Symbol	Namelist	Variable	Description	Units
Φ_V	SYNTHS	PHIV	Cant angle of the vertical stabilizer from vertical. Positive is outward, but Datcom does not distinguish between negative and positive cant. Datcom only calculates changes in Cn_β, Cl_β, Cy_β	deg
Φ_F	SYNTHS	PHIF	Cant angle of the vertical fin from vertical. Positive is outward, but Datcom does not distinguish between negative and positive cant. Datcom only calculates changes in Cn_β, Cl_β, Cy_β	deg
YV	SYNTHS	YV	Lateral offset of the vertical stabilizer from the aircraft centerline. If present, Datcom assumes 2 vertical stabilizers, and all terms in the VTPLNF namelist are duplicated. No interaction effects between twin vertical stabilizers are calculated.	l
YF	SYNTHS	YF	Lateral offset of the vertical fin from the aircraft centerline. If present, Datcom assumes 2 vertical fins, and all terms in the VFPLNF namelist are duplicated. No interaction effects between twin vertical stabilizers are calculated.	l

NAMELIST BØDY

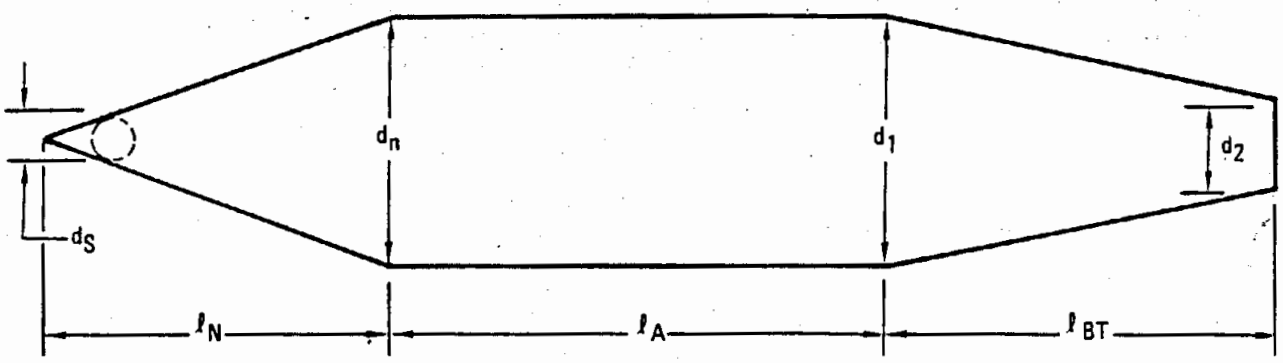

POSSIBLE SUPERSONIC AND HYPERSONIC BODY CONFIGURATIONS

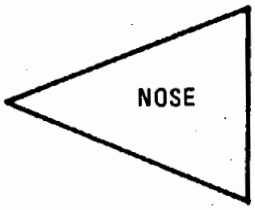

ℓ_N
$\ell_A = \ell_{BT} = 0$
$d_N = d_1 = d_2$

NOTES:
NOSE AND TAIL SEGMENTS MAY BE CONICAL (AS SHOWN) OR OGIVAL.

DIAMETERS d_N, d_1, AND d_2 ARE COMPUTED FROM LINEAR INTERPOLATION OF INPUTS x_i VS R

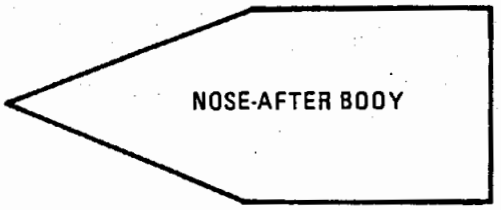

ℓ_N
ℓ_A
$\ell_{BT} = 0$

d_N
$d_1 = d_2$

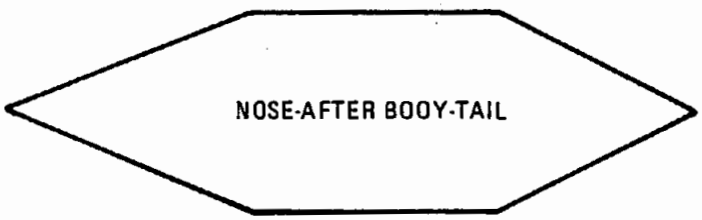

ℓ_N
ℓ_A
ℓ_{BT}
d_N
d_1
$d_2 = 0$

DEFINING ELLIP

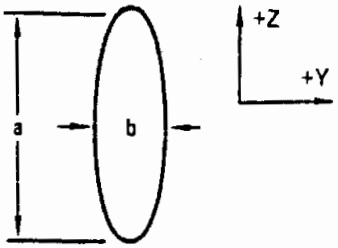

ELLIP > 1

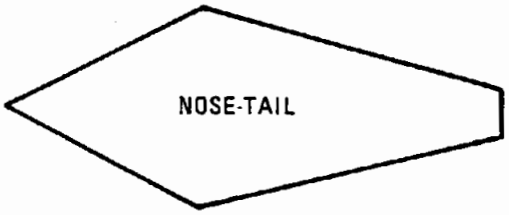

ℓ_N
$\ell_A = 0$
ℓ_{BT}
$d_N = d_1$
d_2

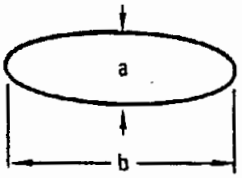

ELLIP < 1

FIGURE 6 INPUT FOR NAMELIST BØDY – BODY GEOMETRIC DATA

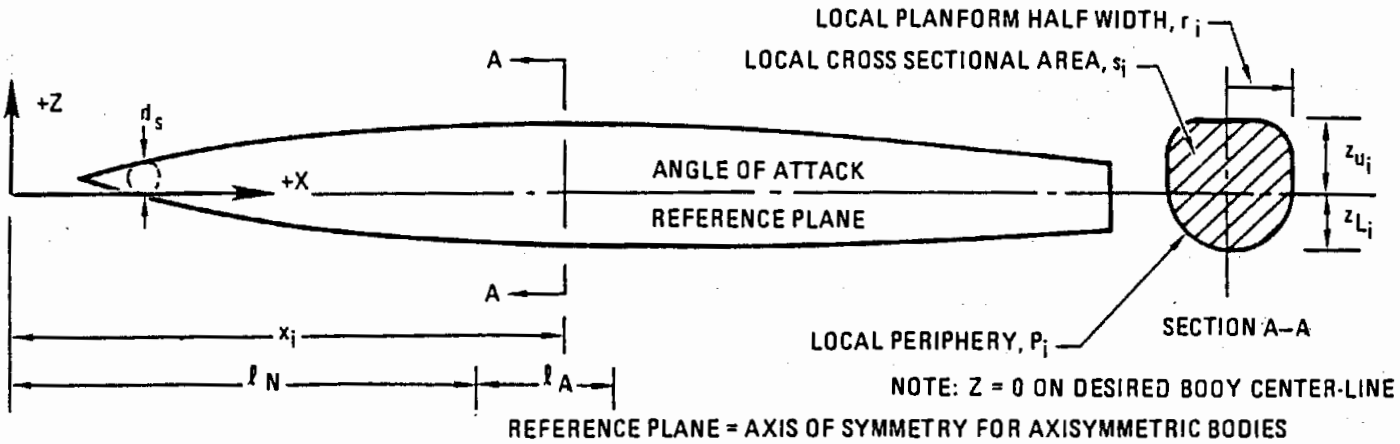

△1 ONLY REQUIRED FOR SUBSONIC ASYMMETRIC BODIES
△2 NOT REQUIRED IN SUBSONIC SPEED REGIME
△3 HYPERSONIC SPEED REGIME ONLY
△4 INPUTS REQUIRED ARE:
- R OR S [REMAINING PARAMETERS EVALUATED ASSUMING A CIRCULAR CROSS-SECTION. IF ELLIP IS SPECIFIED, AN ELLIPTICAL CROSS-SECTION IS ASSUMED]
- R, S AND P ALL SPECIFIED

ENGINEERING SYMBOL	VARIABLE NAME	ARRAY DIMENSION	DEFINITION	UNITS
	NX	–	NUMBER OF LONGITUDINAL BODY STATIONS AT WHICH DATA IS SPECIFIED, MAXIMUM OF 20.	–
x_i	X	20	LONGITUDINAL DISTANCE MEASURED FROM ARBITRARY LOCN	ℓ
S_i	△4 S	20	CROSS SECTIONAL AREA AT STATION x_i	A
P_i	△4 P	20	PERIPHERY AT STATION x_i	ℓ
r_i	△4 R**	20	PLANFORM HALF WIDTH AT STATION x_i	ℓ
z_{u_i}	△1 ZU	20	z – Z-COORDINATE AT UPPER BODY SURFACE AT STATION x_i (POSITIVE WHEN ABOVE CENTERLINE)	ℓ
z_{L_i}	△1 ZL	20	z – Z-COORDINATE AT LOWER BODY SURFACE AT STATION x_i (NEGATIVE WHEN BELOW CENTERLINE)	ℓ
	△2 BNØSE	–	BNOSE = 1.0 CONICAL NOSE, BNOSE = 2.0 OGIVE NOSE	–
	△2 BTAIL	–	BTAIL = 1.0 CONICAL TAIL, BTAIL = 2.0 OGIVE TAIL OMIT FOR $\ell_{BT} = 0$	–
ℓ_N	△2 BLN	–	LENGTH OF BODY NOSE	ℓ
ℓ_A	△2 BLA	–	LENGTH OF CYLINDRICAL AFTERBODY SEGMENT ℓ_A = 0.0 FOR NOSE ALONE OR NOSE-TAIL CONFIGURATIONS	ℓ
d_s	△3 DS	–	NOSE BLUNTNESS DIAMETER, ZERO FOR SHARP NOSEBODIES	ℓ
	ITYPE*	–	= 1. STRAIGHT WING, NO AREA RULE = 2. SWEPT WING, NO AREA RULE = 3. SWEPT WING, AREA RULE SET TO 2.0 IF NOT INPUT	–
	METHØD	–	= 1. USE EXISTING METHODS (DEFAULT) = 2. USE JORGENSEN METHOD	–
e = a/b	ELLIP***	–	ELLIPTICAL BODY HEIGHT TO WIDTH RATIO	–

*USED IN CALCULATION OF TRANSONIC DRAG DIVERGENCE MACH NUMBER, DATCOM FIGURE 4.5.3.1–19
**USE EQUIVALENT RADIUS AT TRANSONIC AND SUPERSONIC MACH NUMBER, $R_{EQ} = \sqrt{S/\pi}$
***METHOD=2 MUST BE SPECIFIED SUBSONICALLY

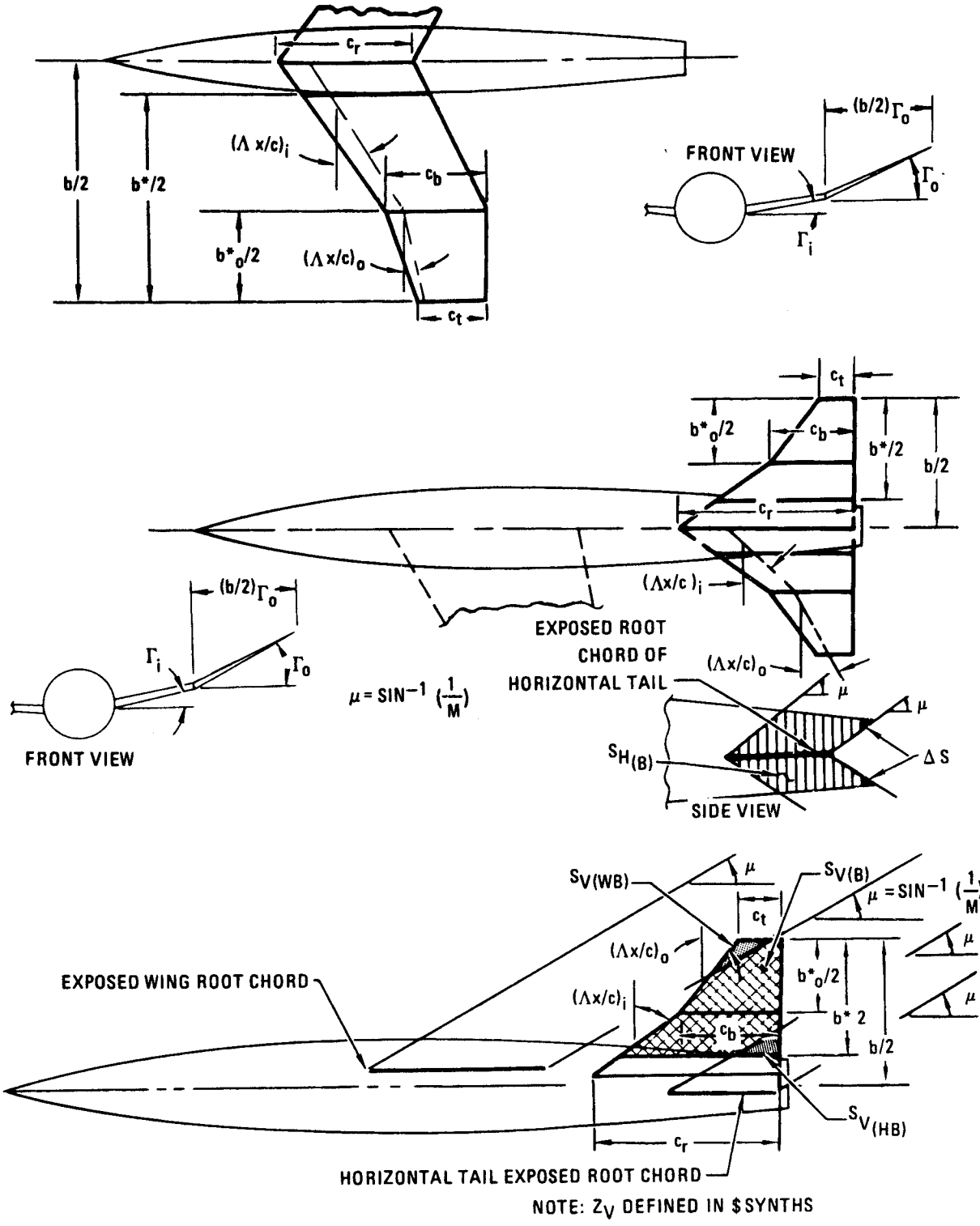

NOTE: Z_V DEFINED IN $SYNTHS

FIGURE 7 INPUT FOR NAMELIST WGPLNF, HTPLNF, VTPLNF AND VFPLNF – PLANFORM VARIABLES

* INDICATES EXPOSED PARAMETER

(1) INPUTS NOT REQUIRED FOR STRAIGHT TAPERED PLANFORM

(2) ONLY REQUIRED FOR SUPERSONIC AND HYPERSONIC SPEED REGIMES. ONE VALUE REQUIRED FOR EACH MACH NO. VALUES MUST CORRESPOND TO MACH ARRAY. IF NOT INPUT, PROGRAM WILL ATTEMPT TO CALCULATE.

INPUT DATA FOR			ENGINEERING SYMBOL	VARIABLE NAME	ARRAY DIMENSION	DEFINITION	UNITS
WGPLNF	HTPLNF	VTPLNF VFPLNF					
●	●	●	c_t	CHRDTP	–	TIP CHORD	ℓ
●	●	●	$b^*_o/2$	(1) SSPNOP	–	SEMI-SPAN OUTBOARD PANEL	ℓ
●	●	●	$b^*/2$	SSPNE	–	SEMI-SPAN EXPOSED PANEL	ℓ
●	●	●	$b/2$	SSPN	–	SEMI-SPAN THEORETICAL PANEL FROM THEORETICAL ROOT CHORD	ℓ
●	●	●	c_b	(1) CHRDBP	–	CHORD AT BREAKPOINT	ℓ
●	●	●	c_r	CHRDR	–	ROOT CHORD	ℓ
●	●	●	$(\Lambda_{x/c})_i$	SAVSI	–	INBOARD PANEL SWEEP ANGLE	DEG
●	●	●	$(\Lambda_{x/c})_o$	(1) SAVSO	–	OUTBOARD PANEL SWEEP ANGLE	DEG
●	●	●	x/c	CHSTAT	–	REFERENCE CHORD STATION FOR INBOARD AND OUTBOARD PANEL SWEEP ANGLES, FRACTION OF CHORD	–
●	●		Θ	TWISTA	–	TWIST ANGLE, NEGATIVE LEADING EDGE ROTATED DOWN (FROM EXPOSED ROOT TO TIP)	DEG
●	●		$(b/2)_{\Gamma_o}$	(1) SSPNDD	–	SEMI-SPAN OF OUTBOARD PANEL WITH DIHEDRAL	ℓ
●	●		Γ_i	DHDADI	–	DIHEDRAL ANGLE OF INBOARD PANEL (IF $\Gamma_i = \Gamma_o$ ONLY INPUT Γ_i)	DEG
●	●		Γ_o	DHDADO	–	DIHEDRAL ANGLE OF OUTBOARD PANEL	DEG
●	●	●		TYPE	–	= 1.0 STRAIGHT TAPERED PLANFORM = 2.0 DOUBLE DELTA PLANFORM (ASPECT RATIO ≤ 3) = 3.0 CRANKED PLANFORM (ASPECT RATIO > 3)	–
	●		$S_{H(B)}$	(2) SHB	20	PORTION OF FUSELAGE SIDE AREA THAT LIES BETWEEN MACH LINES ORIGINATING FROM LEADING AND TRAILING EDGES OF HORIZONTAL TAIL EXPOSED ROOT CHORD	A
	●		S_{ext}	(2) SEXT	20	PORTION OF EXTENDED FUSELAGE SIDE AREA THAT LIES BETWEEN MACH LINES ORIGINATING FROM LEADING AND TRAILING EDGES OF HORIZONTAL TAIL EXPOSED ROOT CHORD $S_{ext} = S_{H(B)} + 2\Delta S$	A
	●		ℓ_P	(2) RLPH	20	LONGITUDINAL DISTANCE BETWEEN CG AND CENTROID OF $S_{H(B)}$, POSITIVE AFT OF CG	ℓ
		●	$S_{V(WB)}$	(2) SVWB	20	PORTION OF EXPOSED VERTICAL PANEL AREA THAT LIES BETWEEN MACH LINES EMANATING FROM LEADING AND TRAILING EDGES OF WING EXPOSED ROOT CHORD	A
		●	$S_{V(B)}$	(2) SVB	20	AREA OF EXPOSED VERTICAL PANEL NOT INFLUENCED BY WING OR HORIZONTAL TAIL	A
		●	$S_{V(HB)}$	(2) SVHB	20	PORTION OF EXPOSED VERTICAL PANEL AREA THAT LIES BETWEEN MACH LINES EMANATING FROM LEADING AND TRAILING EDGES OF HORIZONTAL TAIL EXPOSED ROOT CHORD	A

INPUTS FOR NAMELIST			ENGINEERING SYMBOL	VARIABLE NAME	ARRAY DIMENSION	DEFINITION	INPUTS PER SPEED REGIME			
WGSCHR	HTSCHR	VTSCHR, VFSCHR					SUBSONIC	TRANSONIC	SUPERSONIC	HYPERSONIC
●	●	●	t/c	TØVC	–	MAXIMUM AIRFOIL SECTION THICKNESS, FRACTION OF CHORD	■	■	■	■
●	●		Δ_y	DELTAY	–	DIFFERENCE BETWEEN AIRFOIL ORDINATES AT 6.0 AND .15% CHORD, PERCENT CHORD	■	■	■	■
●	●	●	$(x/c)_{MAX}$	XØVC	–	CHORD LOCATION OF MAXIMUM AIRFOIL THICKNESS, FRACTION OF CHORD	■	■		
●	●		C_{l_i}	CLI	–	AIRFOIL SECTION DESIGN LIFT COEFFICIENT	■	■		
●	●		α_i	ALPHAI	–	ANGLE OF ATTACK AT SECTION DESIGN LIFT COEFFICIENT, DEG	■	■		
●	●	●	C_{l_α}	CLALPA (4)	20	AIRFOIL SECTION LIFT CURVE SLOPE $\frac{dC_l}{d_\alpha}$, PER DEG.	■			
●	●		$C_{l_{max}}$	CLMAX (4)	20	AIRFOIL SECTION MAXIMUM LIFT COEFFICIENT	■			
●	●		C_{m_0}	CMO OR CMØ	–	SECTION ZERO LIFT PITCHING MOMENT COEFFICIENT	■	■		
●	●	●	$(R_{LE})_i$	LERI	–	AIRFOIL LEADING EDGE RADIUS FRACTION OF CHORD	■	■	■	■
●	●	●	$(R_{LE})_o$	LERØ (3)	–	R_{LE} FOR OUTBOARD PANEL FRACTION OF CHORD	●	●	●	●
●	●			CAMBER=TRUE	–	CAMBERED AIRFOIL SECTION FLAG	■			
●	●	●	$(t/c)_o$	TØVCØ (3)	–	t/c FOR OUTBOARD PANEL	●	●	○	○
●	●	●	$(x/c)_{MAX_o}$	XØVCØ (3)	–	$(x/c)_{MAX}$ FOR OUTBOARD PANEL	●	○	○	○
●	●		$(C_{m_0})_o$	CMØT OR CMOT (3)	–	C_{m_0} FOR OUTBOARD PANEL	●	●	○	○
●			$(C_{l_{MAX}})_{M=0}$	CLMAXL	–	AIRFOIL MAXIMUM LIFT COEFFICIENT AT MACH EQUAL ZERO	■	■		
●	●		$(C_{l_\alpha})_{M=0}$	CLAMO OR CLAMØ	–	AIRFOIL SECTION LIFT CURVE SLOPE AT MACH EQUAL ZERO, PER DEG		■		
●	●	●	$(t/c)_{eff}$	TCEFF	–	PLANFORM EFFECTIVE THICKNESS RATIO, FRACTION OF CHORD		■	■	■
●	●	●	K	KSHARP (6)	–	WAVE-DRAG FACTOR FOR SHARP-NOSED AIRFOIL SECTION, NOT INPUT FOR ROUND NOSED AIRFOILS		■	■	■
●			δ_n	SLØPE (6)	6	AIRFOIL SURFACE SLOPE AT 0,20,40 60, 80, AND 100% CHORD, DEG. POSITIVE WHEN THE TANGENT INTERSECTS THE CHORD PLANE FORWARD OF THE REFERENCE CHORD POINT		■	■	■
●	●	●		ARCL	–	ASPECT RATIO CLASSIFICATION (SEE TABLE 9)	○	○	○	○

FIGURE 8 INPUT FOR NAMELISTS WGSCHR, HTSCHR, VTSCHR AND VFSCHR – SECTION CHARACTERISTICS

INPUTS FOR NAMELIST			ENGINEERING SYMBOL	VARIABLE NAME	ARRAY DIMENSION	DEFINITION	INPUTS PER SPEED REGIME			
WGSCHR	HTSCHR	VTSCHR, VFSCHR					SUBSONIC	TRANSONIC	SUPERSONIC	HYPERSONIC
●	●		X_{ac}/C	XAC 4	20	SECTION AERODYNAMIC CENTER, FRACTION OF CHORD (SEE VOL II FOR DEFAULT)	□		□	
●				DWASH 2	–	SUBSONIC DOWNWASH METHOD FLAG = 1. USE DATCOM METHOD 1 = 2. USE DATCOM METHOD 2 = 3. USE DATCOM METHOD 3 SUPERSONIC, USE DATCOM METHOD 2 IF DWASH = 1 OR 2 (SEE FIGURE 9)	○		○	
●	●		$(y/c)_{max}$	YCM	–	AIRFOIL MAXIMUM CAMBER, FRACTION OF CHORD	■	■	■	■
●	●		C_{L_d}	CLD 1	–	CONICAL CAMBER DESIGN LIFT COEFFICIENT FOR M = 1.0 DESIGN. SEE–NACA RM A55G19 (DEFAULT TO 0.0)	●	●	●	●
●	●	●		TYPEIN	–	TYPE OF AIRFOIL SECTION COORDINATES INPUT FOR AIRFOIL SECTION MODULE = 1.0 UPPER AND LOWER SURFACE COORDINATES (YUPPER AND YLOWER) = 2.0 MEAN LINE AND THICKNESS DISTRIBUTION (MEAN AND THICK)	○	○	○	○
●	●	●		NPTS	–	NUMBER OF SECTION POINTS INPUT, MAX. = 50	○	○	○	○
●	●	●	X_c/C	XCØRD 7	50	ABSCISSAS OF INPUT POINTS, TYPEIN = 1.0 OR 2.0, XCØRD(1) = 0.0 XCØRD(NPTS) = 1.0 REQUIRED	○	○	○	○
●	●	●	Y_u/C	YUPPER 5	50	ORDINATES OF UPPER SURFACE, TYPEIN = 1.0 FRACTION OF CHORD, AND REQUIRES YUPPER(1) = 0.0 YUPPER(NPTS) = 0.0	○	○	○	○
●	●	●	Y_L/C	YLØWER 5	50	ORDINATES OF LOWER SURFACE, TYPEIN = 1.0 FRACTION OF CHORD, AND REQUIRES YLOWER(1) = 0.0 YLOWER(NPTS) = 0.0	○	○	○	○
●	●	●	Y_m/C	MEAN 5	50	ORDINATES OF MEAN LINE, TYPEIN = 2.0 FRACTION OF CHORD, AND REQUIRES MEAN(1) = 0.0 MEAN(NPTS) = 0.0	○	○	○	○
●	●	●	t_c/C	THICK 5	50	THICKNESS DISTRIBUTION, TYPEIN = 2.0 FRACTION OF CHORD, AND REQUIRES THICK(1) = 0.0 THICK(NPTS) = 0.0	○	○	○	○

● REQUIRED INPUT
○ OPTIONAL INPUT
■ REQUIRED INPUT, USER SUPPLIED OR COMPUTED BY AIRFOIL SECTION MODULE IF AIRFOIL DEFINED WITH NACA CARD
□ OPTIONAL INPUT, COMPUTED BY AIRFOIL SECTION MODULE IF AIRFOIL DEFINED WITH NACA CARD OR SECTION COORD

WAVE-DRAG FACTORS FOR SHARP NOSE AIRFOILS

BASIC WING AIRFOIL SECTION	KSHARP	SECTION
BICONVEX	$\frac{16}{3}$	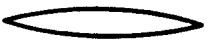
DOUBLE WEDGE	$\frac{c/x_t}{1 - x_t/c}$	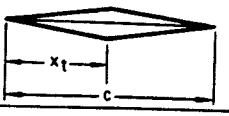
HEXAGONAL	$\frac{c(c-x_2)}{x_1 \; x_3}$	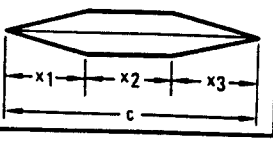

TCEFF – PLANFORM EFFECTIVE THICKNESS RATIO.
FOR STRAIGHT TAPERED PLANFORMS, TCEFF = TØVC.
FOR NONSTRAIGHT PLANFORMS:

$$TCEFF = \left[\frac{\int_0^{b/2} \left(\frac{t}{c}\right)^2 c \; dy}{\int_0^{b/2} c \; dy} \right]^{1/2}$$

$$= \left[\frac{\int_0^{b/2} \left(\frac{t}{c}\right)^2 c \; dy}{\frac{S}{2}} \right]^{1/2}$$

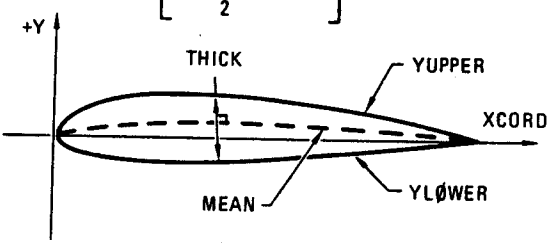

1. SEE DATCOM SECTIONS 4.3.2.1 AND 4.3.3.2 (LINEAR REGRESSION METHODS) IF SET LESS THAN ZERO WILL BYPASS THE REGRESSION METHODS
2. INPUT ONLY FOR CONFIGURATIONS WITH A HORIZONTAL TAIL
3. NOT REQUIRED FOR STRAIGHT TAPERED PLANFORMS
4. ARRAY ELEMENTS MUST CORRESPOND TO THE MACH OR VINF ARRAY (NAMELIST FLTCØN)
5. ARRAY ELEMENTS MUST CORRESPOND TO THE XCØRD ARRAY
6. ONLY CALCULATED FOR SUPERSONIC AIRFOILS USING NACA CARD.
7. SEE SECTION B.3.2 FOR INPUT RECOMMENDATIONS

TABLE 9 ASPECT RATIO CLASSIFICATION "ARCL"

BORDER-LINE RANGE:

$$\frac{3}{(C_1 + 1)\cos\Lambda_{LE}} \leqslant A \leqslant \frac{4}{(C_1 + 1)\cos\Lambda_{LE}}$$

"ARCL" CAN BE SET IN NAMELISTS WGSCHR, HTSCHR, VTSCHR AND VFSCHR TO SELECT EITHER LOW OR HIGH ASPECT RATIO METHODS. WHEN "ARCL" IS NOT SET, AND "A" IS IN THE BORDER-LINE RANGE, THE FOLLOWING CRITERIA ARE USED:

$$A < \frac{3.5}{(C_1 + 1)\cos\Lambda_{LE}} \quad \text{"LOW ASPECT RATIO"}$$

$$A \geqslant \frac{3.5}{(C_1 + 1)\cos\Lambda_{LE}} \quad \text{"HIGH ASPECT RATIO"}$$

SEE DATCOM SECTION 4.1.3.3

METHOD 1
$b_w/b_h \geq 1.5$

METHOD 2 (EMPIRICAL METHOD)
$1.25 \leq b_w/b_h \leq 3.6$

METHOD 3 (CANARD METHOD)
$b_w/b_h \leq 1.0$

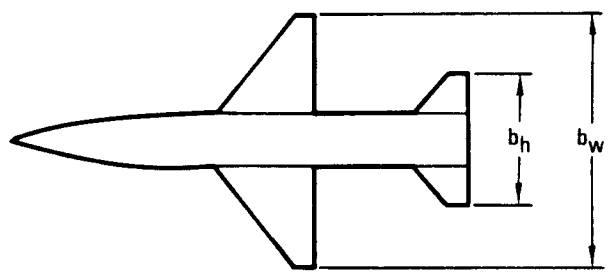

METHOD IN RANGE $1.0 \leq b_w/b_h \leq 1.5$ CAN BE SELECTED USING VARIABLE "DWASH" IN NAMELIST WGSCHR

FIGURE 9 PRIMARY APPLICATION REGIMES FOR SUBSONIC DOWNWASH METHODS IN DATCOM

DEFINING THE TRANSONIC WING AND HORIZONTAL TAIL LIFT CURVE

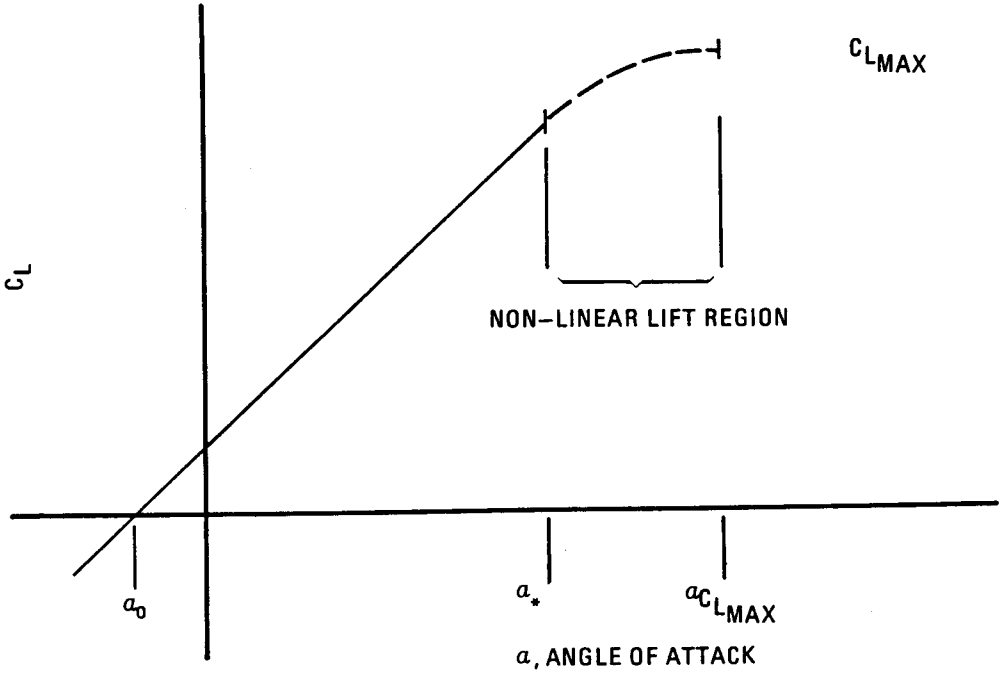

NOTES:

1. IF α_0 AND α_* ARE INPUT USING EXPR –– THE LINEAR LIFT REGION IS DEFINED.
2. IF $\alpha C_{L_{MAX}}$ AND $C_{L_{MAX}}$ ARE ALSO INPUT USING EXPR –– THE COMPLETE LIFT CURVE IS DEFINED.
3. IF THE COMPLETE LIFT CURVES FOR THE WING AND HORIZONTAL TAIL ARE DEFINED AND BOTH SURFACES HAVE STRAIGHT TAPERED PLANFORMS, ALL DATA DESIGNATED IN TABLE 2 THAT REQUIRE EXPERIMENTAL DATA INPUT ARE CALCULATED.
4. IF THE BODY LIFT CURVE IS INPUT AT TRANSONIC MACH NUMBERS, CONFIGURATION DATA INVOLVING THE BODY ARE SIGNIFICANTLY IMPROVED.

FIGURE 10 TRANSONIC EXPERIMENTAL DATA SUBSTITUTION

TRANSONIC DATA AVAILABLE WITH EXPERIMENTAL DATA SUBSTITUTION

GIVEN	DATA CALCULATED
NONE	VERT. C_{D_0} W–B C_L H–B C_L W–B–H, W–B–V, & W–B–H–V C_{D_0}
WING C_L VS α	WING $C_D, C_N, C_A, C_{\ell\beta}$ W–B $C_D, C_N, C_A, C_{\ell\beta}$ W–B–V C_D, C_L, C_N, C_A
HORIZ. C_L VS α	HORIZ. $C_D, C_N, C_A, C_{\ell\beta}$ H–B $C_D, C_N, C_A, C_{\ell\beta}$
BODY C_L VS α	B–V C_L, C_N, C_A
W–B C_L VS α HORIZ. C_L & C_D VS α q/q_∞ & ϵ VS α	W–B–T C_D
W–B C_L VS α HORIZ. C_L VS α q/q_∞, ϵ, & $d\epsilon/d\alpha$ VS α	W–B–T C_L

ENGINEERING SYMBOL	VARIABLE NAME	ARRAY DIMENSION	DEFINITION
$(C_{L_\alpha})_B$	CLAB	20	BODY LIFT CURVE SLOPE VS ANGLE OF ATTACK, PER DEGREE
$(C_{m_\alpha})_B$	CMAB	20	BODY PITCHING MOMENT SLOPE VS ANGLE OF ATTACK, PER DEGREE
$(C_{D_j})_B$	CDB	20	BODY DRAG COEFFICIENT VS ANGLE OF ATTACK
$(C_L)_B$	CLB	20	BODY LIFT COEFFICIENT VS ANGLE OF ATTACK
$(C_m)_B$	CMB	20	BODY PITCHING MOMENT COEFFICIENT VS ANGLE OF ATTACK
$(C_{L_\alpha})_W$	CLAW	20	WING LIFT CURVE SLOPE VS ANGLE OF ATTACK, PER DEGREE
$(C_{m_\alpha})_W$	CMAW	20	WING PITCHING MOMENT SLOPE VS ANGLE OF ATTACK, PER DEGREE
$(C_{D_j})_W$	CDW	20	WING DRAG COEFFICIENT VS ANGLE OF ATTACK
$(C_{L_j})_W$	CLW	20	WING LIFT COEFFICIENT VS ANGLE OF ATTACK
$(C_{mj})_W$	CMW	20	WING PITCHING MOMENT COEFFICIENT VS ANGLE OF ATTACK
$(C_{L_\alpha})_H$	CLAH	20	HORIZONTAL TAIL LIFT CURVE SLOPE VS ANGLE OF ATTACK, PER DEGREE
$(C_{m_\alpha})_H$	CMAH	20	HORIZONTAL TAIL PITCHING MOMENT SLOPE VS ANGLE OF ATTACK, PER DEGREE
$(C_D)_H$	CDH	20	HORIZONTAL TAIL DRAG COEFFICIENT VS ANGLE OF ATTACK
$(C_L)_H$	CLH	20	HORIZONTAL TAIL LIFT COEFFICIENT VS ANGLE OF ATTACK
$(C_m)_H$	CMH	20	HORIZONTAL TAIL PITCHING MOMENT COEFFICIENT VS ANGLE OF ATTACK
$(C_{D_0})_V$	CDV	–	VERTICAL TAIL ZERO LIFT DRAG COEFFICIENT
$(C_{L_\alpha})_{WB}$	CLAWB	20	WING-BODY LIFT CURVE SLOPE VS ANGLE OF ATTACK, PER DEGREE
$(C_{m_\alpha})_{WB}$	CMAWB	20	WING-BODY PITCHING MOMENT SLOPE VS ANGLE OF ATTACK, PER DEGREE
$(C_D)_{WB}$	CDWB	20	WING-BODY DRAG COEFFICIENT VS ANGLE OF ATTACK
$(C_L)_{WB}$	CLWB	20	WING-BODY LIFT COEFFICIENT VS ANGLE OF ATTACK
$(C_m)_{WB}$	CMWB	20	WING-BODY PITCHING MOMENT COEFFICIENT VS ANGLE OF ATTACK
$d\epsilon/d\alpha$	DEØDA	20	DOWNWASH GRADIENT VS ANGLE OF ATTACK
ϵ	EPSLØN	20	DOWNWASH ANGLE VS ANGLE OF ATTACK, DEGREES
q_H/q_∞	QØQINF	20	RATIO OF HORIZONTAL TAIL DYNAMIC PRESSURE TO THE FREE STREAM VALUE VS ANGLE OF ATTACK
$(\alpha_0)_W$ △2	ALPØW	–	WING ZERO LIFT ANGLE OF ATTACK, DEG
$(\alpha^*)_W$ △2	ALPLW	–	WING ANGLE OF ATTACK WHERE LIFT BECOMES NON-LINEAR, DEG
$(\alpha_{C_{LMAX}})_W$ △2	ACLMW	–	WING ANGLE OF ATTACK FOR MAX. LIFT, DEG
$(C_{LMAX})_W$ △2	CLMW	–	WING MAX. LIFT COEFFICIENT
$(\alpha_0)_H$ △2	ALPØH	–	HORIZONTAL TAIL ZERO LIFT ANGLE OF ATTACK, DEG
$(\alpha_{L^*})_H$ △2	ALPLH	–	HORIZONTAL TAIL ANGLE OF ATTACK WHERE LIFT BECOMES NON-LINEAR, DEG
$(\alpha_{C_{LMAX}})_H$ △2	ACLMH	–	HORIZONTAL TAIL ANGLE OF ATTACK FOR MAX. LIFT, DEG
$(C_{LMAX})_H$ △2	CLMH	–	HORIZONTAL TAIL MAX. LIFT COEFFICIENT

NOTE: 1 EXPERIMENTAL DATA PARAMETERS MUST BE BASED ON THE REFERENCE AREA AND LENGTHS AS USED BY DIGITAL DATCOM. SEE FIGURE 4 FOR DEFINITION OF DIGITAL DATCOM REFERENCE PARAMETERS.

△2 REQUIRED TO SUPPORT TRANSONIC SECOND LEVEL METHODS, USED ONLY AT TRANSONIC MACH NUMBERS. THE USE OF THESE PARAMETERS IS SHOWN IN FIGURE 9.

3 EACH EXPERIMENTAL DATA NAMELIST REPRESENTS DATA FOR ONE MACH NUMBER. THE LAST TWO DIGITS OF THE NAMELIST NAME CORRESPONDS TO THE MACH NUMBER SEQUENCE IN NAMELIST FLTCØN, FIGURE 3. NAMELIST EXPR01 PROVIDES EXPERIMENTAL DATA FOR THE FIRST MACH NUMBER, EXPR02 THE SECOND, EXPR15 THE FIFTEENTH, ETC. ALL SIX CHARACTERS IN THE NAMELIST NAME MUST BE SPECIFIED.

FIGURE 11 INPUT FOR NAMELIST EXPRnn– EXPERIMENTAL DATA INPUT

3.4 GROUP III INPUT DATA

The namelists required for additional or "special" configuration definition are presented in Figures 12 through 22, and Tables 10 through 12. Specifically, the namelists PROPWR, JETPWR, GRNDEF, TVTPAN, ASYFLP and CONTAB enable the user to "build upon" the configuration defined through Group II inputs. The remaining namelists LARWB, TRNJET and HYPEFF define "stand alone" configurations whose namelists are not used with Group II inputs.

The inputs for propellor power or jet power effects are made through namelists PROPWR and JETPWE, respectively. The number of engines allowable is one or two and the engines may be located anywhere on the configuration. The configuration must have a body and a wing defined and, optionally, a horizontal tail and a vertical tail. Since the Datcom method accounts for incremental aerodynamic effects due to power, configuration changes required to account for proper placement of the engine(s) on the configuration (e.g., pylons) are not taken into account.

Twin vertical panels, defined by namelist TVTPAN, can be defined on either the wing or horizontal tail. Since the method only computes the incremental lateral stability results, "end-plate" effects on the longitudinal characteristics are not calculated. If the twin vertical panels are present on the horizontal tail, and a vertical tail or ventral fin is specified, the mutual interference among the panels is not computed.

Inputs for the high lift and control devices are made with the namelists SYMFLP, ASYFLP and CONTAB. In general, the eight flap types defined using SYMFLP (variable FTYPE) are assumed to be located on the most aft lifting surface, either horizontal tail or wing if a horizontal tail is not defined. Jet flaps, also defined using SYMFLP, will always be located on the wing, even with the presence of a horizontal tail. Control tabs (namelist CONTAB) are assumed to be mounted an a plain trailing edge flap (FTYPE=1); therefore, for a control tab analysis namelists CONTAB and SYMFLP (with FTYPE=1) must both be input. For ASYFLP namelist inputs, the spoiler and aileron devices (STYPE of 1., 2., 3. or 4.) are defined for the wing, even with the presence of a horizontal tail, whereas the all-moveable horizontal tail (STYPE=5.0) is, of course, a horizontal tail device.

NAMELIST PRØPWR

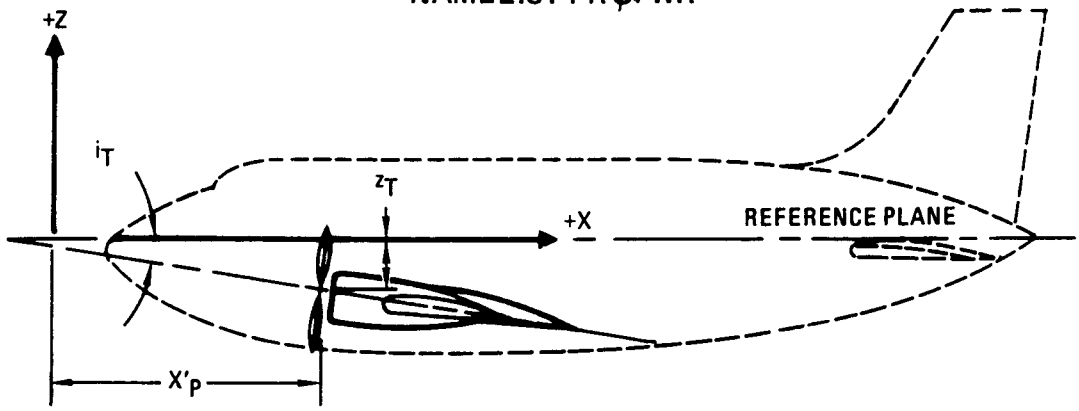

PROPELLER POWER EFFECT METHODS ARE ONLY APPLICABLE TO LONGITUDINAL STABILITY PARAMETERS IN THE SUBSONIC SPEED REGIME.

ENGINEERING SYMBOL	VARIABLE NAME	ARRAY DIMENSION	DEFINITION	UNITS
i_T	AIETLP	–	ANGLE OF INCIDENCE OF ENGINE THRUST AXIS,	DEG
n	NENGSP	–	NUMBER OF ENGINES (1 OR 2)	–
t'_c	THSTCP	–	THRUST COEFFICIENT = $\frac{2T}{\rho_\infty V_\infty^2 S_{REF}}$	–
x'_P	PHALØC	–	AXIAL LOCATION OF PROPELLER HUB	ℓ
Z_T	PHVLØC	–	VERTICAL LOCATION OF PROPELLER HUB	ℓ
R_P	PRPRAD	–	PROPELLER RADIUS	ℓ
K_N	ENGFCT	–	EMPIRICAL NORMAL FORCE FACTOR	–
$(b_p)_{0.3R_P}$	BWAPR3	–	BLADE WIDTH AT 0.3 PROPELLER RADIUS	ℓ
$(b_p)_{0.6R_P}$	BWAPR6	–	BLADE WIDTH AT 0.6 PROPELLER RADIUS	ℓ
$(b_p)_{0.9R_P}$	BWAPR9	–	BLADE WIDTH AT 0.9 PROPELLER RADIUS	ℓ
N_B	NØPBPE	–	NUMBER OF PROPELLER BLADES PER ENGINE	–
$(\beta)_{0.75R_P}$	BAPR75	–	BLADE ANGLE AT 0.75 PROPELLER RADIUS	DEG
Y_P	YP	–	LATERAL LOCATION OF ENGINE	ℓ
	CRØT	–	.TRUE. COUNTER ROTATING PROPELLER .FALSE. NON COUNTER ROTATING PROPELLER	–

(1) K_N IS NOT REQUIRED AS INPUT IF (b_p)'s ARE INPUT AND CONVERSELY (b_p)'s ARE NOT REQUIRED IF K_N IS INPUT. (SEE SECTION 4.6.1 OF DATCOM)

FIGURE 12 INPUT FOR NAMELIST PRØPWR – PROPELLOR POWER PARAMETERS

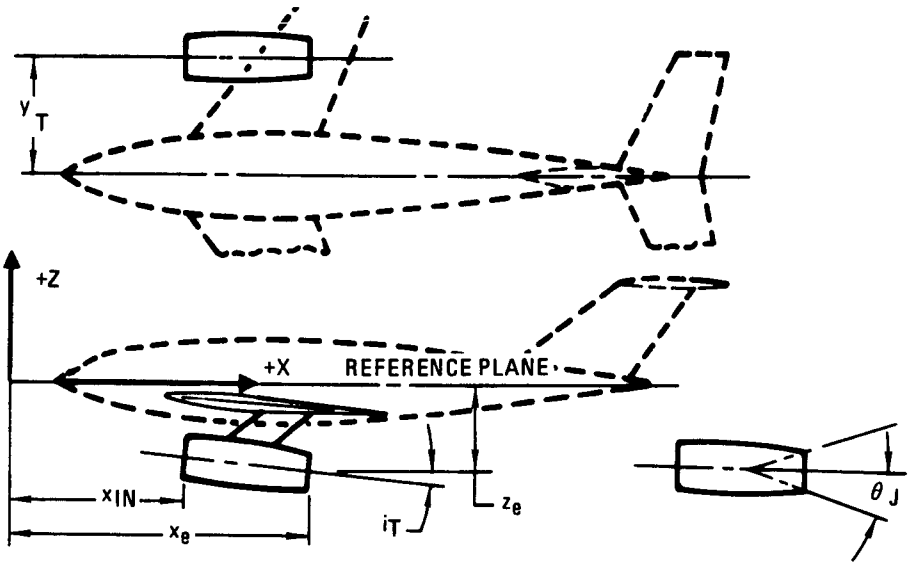

JET POWER EFFECT METHODS ARE ONLY APPLICABLE TO LONGITUDINAL STABILITY PARAMETERS IN THE SUBSONIC SPEED REGIME.

JET POWER INPUTS ARE REQUIRED FOR EXTERNALLY BLOWN JET FLAP (EBF) CONFIGURATIONS. NOT REQUIRED PURE JET FLAPS OR INTERNALLY BLOWN FLAPS (IBF)

EBF JET FLAP INPUTS	JET POWER INPUTS	ENGINEERING SYMBOL	NAME	ARRAY DIMENSION	DEFINITION	UNITS
●	●	i_T	AIETLJ	–	ANGLE OF INCIDENCE OF ENGINE THRUST LINE	DEG
	●	n	NENGSJ	–	NUMBER OF ENGINES (1 OR 2)	–
	●	T_c	THSTCJ	–	THRUST COEFFICIENT = $\frac{2T}{P_\infty V_\infty^2 S_{REF}}$	–
	●	x_{IN}	JIALØC	–	AXIAL LOCATION OF JET ENGINE INLET	ℓ
●	●	z_e	JEVLØC	–	VERTICAL LOCATION OF JET ENGINE EXIT	ℓ
●	●	x_e	JEALØC	–	AXIAL LOCATION OF JET ENGINE EXIT	ℓ
	●	A_I	JINLTA	–	JET ENGINE INLET AREA	A
●	●	θ_J	JEANGL	–	JET EXIT ANGLE	DEG
	●	V_J	JEVELØ	–	JET EXIT VELOCITY	ℓ/t
	●	T_∞	AMBTMP	–	AMBIENT TEMPERATURE	DEG
	●	T_J	JESTMP	–	JET EXIT STATIC TEMPERATURE	DEG
●	●	y_T	JELLØC	–	LATERAL LOCATION OF JET ENGINE	ℓ
	●	p'_0	JETØTP	–	JET EXIT TOTAL PRESSURE	F/A
	●	P_∞	AMBSTP	–	AMBIENT STATIC PRESSURE	F/A
●	●	R_j	JERAD	–	RADIUS OF JET EXIT	ℓ

FIGURE 13 INPUT FOR NAMELIST JETPWR – JET POWER PARAMETERS

NAMELIST GRNDEF

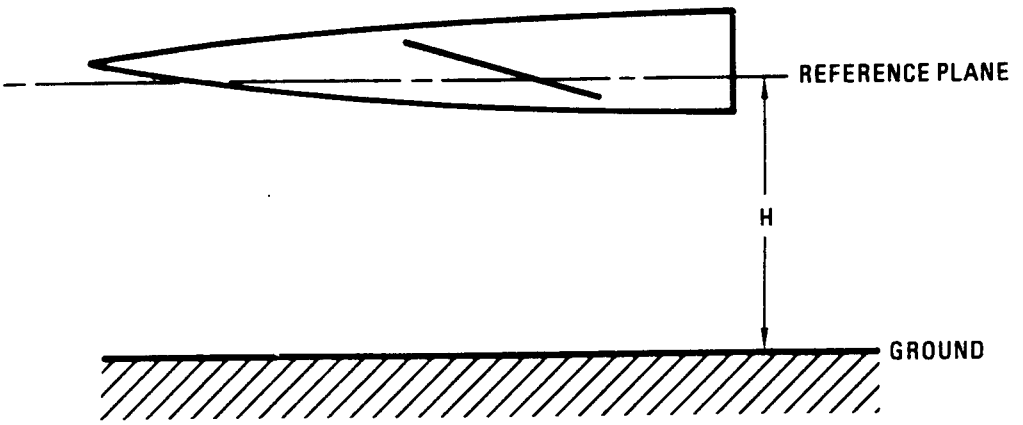

GROUND EFFECT METHODS ARE ONLY APPLICABLE TO LONGITUDINAL STABILITY PARAMETERS IN THE SUBSONIC SPEED REGIME.

ENGINEERING SYMBOL	VARIABLE NAME	ARRAY DIMENSION	DEFINITION	UNITS
N_H	NGH	–	NUMBER OF GROUND HEIGHTS TO BE RUN	–
H	GRDHT	10	VALUES OF GROUND HEIGHTS. GROUND HEIGHTS EQUAL ALTITUDE OF REF. PLANE RELATIVE TO GROUND	ℓ

FIGURE 14 INPUT FOR NAMELIST GRNDEF – GROUND EFFECT DATA

NAMELIST TVTPAN

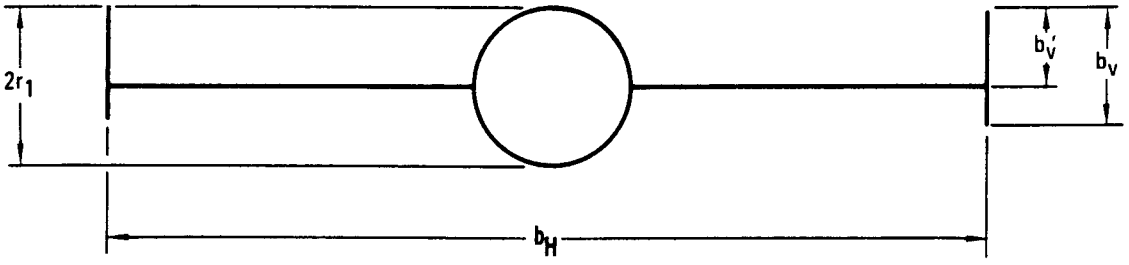

EFFECTS OF TWIN VERTICAL PANELS ONLY REFLECTED IN SUBSONIC LATERAL STABILITY RESULTS

ENGINEERING SYMBOL	VARIABLE NAME	ARRAY DIMENSION	DEFINITION	UNITS
b_v'	BVP	–	VERTICAL PANEL SPAN ABOVE LIFTING SURFACE	ℓ
b_v	BV	–	VERTICAL PANEL SPAN	ℓ
$2r_1$	BDV	–	FUSELAGE DEPTH AT QUARTER CHORD-POINT OF VERTICAL PANEL MEAN AERODYNAMIC CHORD	ℓ
b_H	BH	–	DISTANCE BETWEEN VERTICAL PANELS	ℓ
S_V	SV	–	PLAN FORM AREA OF ONE VERTICAL PANEL	A
ϕ_{TE}	VPHITE	–	TOTAL TRAILING-EDGE ANGLE OF VERTICAL PANEL AIRFOIL SECTION	DEG
ℓ_P	VLP	–	DISTANCE PARALLEL TO LONG. AXIS BETWEEN THE CG AND THE QUARTER CHORD POINT OF THE MAC OF THE PANEL. POSITIVE IF AFT OF CG.	ℓ
Z_P	ZP	–	DISTANCE IN THE Z DIRECTION BETWEEN THE CG AND THE MAC OF THE PANEL, POSITIVE FOR PANEL ABOVE CG.	ℓ

FIGURE 15 INPUT FOR NAMELIST TVTPAN – TWIN-VERTICAL PANEL INPUT

NAMELIST SYMFLP

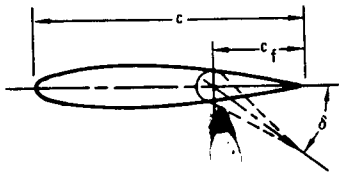

PLAIN TRAILING-EDGE FLAP

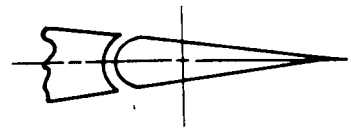

ROUND NOSE FLAP
NTYPE = 1.0

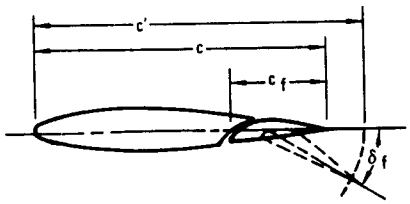

SINGLE-SLOTTED FLAP

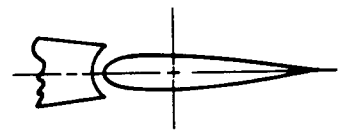

ELLIPTIC NOSE FLAP
NTYPE = 2.0

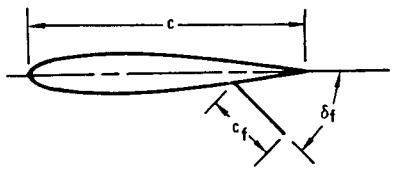

SPLIT FLAP

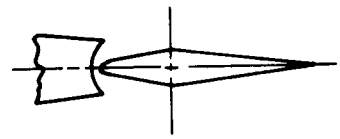

SHARP NOSE FLAP
NTYPE = 3.0

CLASSIFICATION OF PLAIN FLAP NOSE SHAPES

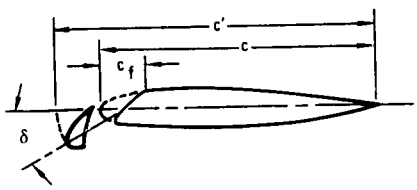

LEADING-EDGE SLAT

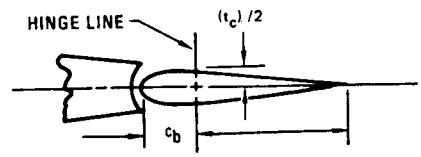

CONTROL BALANCE INPUT VARIABLES

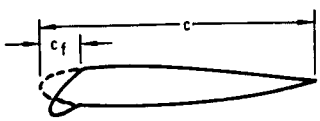

LEADING-EDGE-FLAP

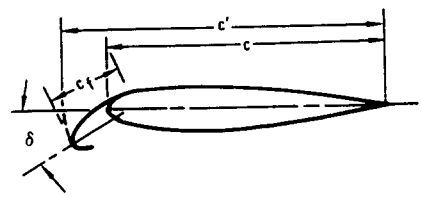

KRUEGER FLAP

FIGURE 16 INPUT FOR NAMELIST SYMFLP – SYMETRICAL FLAP DEFLECTION INPUTS

ENGR SYMBOL	VARIABLE NAME	ARRAY DIMENSION	DEFINITION	UNITS	PLAIN FLAPS	SINGLE SLOTTED FLAPS	FOWLER FLAPS	DOUBLE SLOTTED FLAPS	SPLIT FLAPS	LEADING EDGE FLAP	LEADING EDGE SLATS	KRUEGER FLAP	JET FLAPS
	FTYPE	–	= 1.0 PLAIN FLAPS	–	●								●
			= 2.0 SINGLE SLOTTED FLAPS			●							●[2]
			= 3.0 FOWLER FLAPS				●						●
			= 4.0 DOUBLE SLOTTED FLAPS					●					●
			= 5.0 SPLIT FLAPS						●				
			= 6.0 LEADING EDGE FLAP							●			
			= 7.0 LEADING EDGE SLATS								●		
			= 8.0 KRUEGER									●	●
	NDELTA	–	NUMBER OF FLAP OR SLAT DEFLECTION ANGLES, MAX 9	–	●	●	●	●	●	●	●	●	●
δ_f	DELTA	9	FLAP DEFLECTION ANGLE MEASURED STEAMWISE	DEG	●	●	●	●	●	●	●	●	
$\tan(\phi TE/2)$	PHETE	–	TANGENT OF AIRFOIL TRAILINE EDGE ANGLE BASED ON ORDINATES AT 90 AND 99 PERCENT CHORD	–	●	●	●	●	●				
$\tan(\phi TE/2)$	PHETEP	–	TANGENT OF AIRFOIL TRAILING EDGE ANGLE BASED ON ORDINATES AT 95 AND 99 PERCENT CHORD	–	●	●	●	●	●				
C_{f_i}	CHRDFI	–	FLAP CHORD AT INBOARD END OF FLAP, MEASURED PARALLEL TO LONGITUDINAL AXIS	ℓ	●	●	●	●	●	●	●	●	●
C_{f_o}	CHRDFØ	–	FLAP CHORD AT OUTBOARD END OF FLAP, MEASURED PARALLEL TO LONGITUDINAL AXIS	ℓ	●	●	●	●	●	●	●	●	●
b_i	SPANFI	–	SPAN LOCATION OF INBOARD END OF FLAP, MEASURED PERPENDICULAR TO VERTICAL PLANE OF SYMMETRY	ℓ	●	●	●	●	●	●	●	●	●
b_o	SPANFØ	–	SPAN LOCATION OF OUTBOARD END OF FLAP, MEASURED PERPENDICULAR TO VERTICAL PLANE OF SYMMETRY	ℓ	●	●	●	●	●	●	●	●	●
c_i'	CPRMEI	9	TOTAL WING CHORD AT INBOARD END OF FLAP (TRANSLATING DEVICES ONLY) MEASURED PARALLEL TO LONGITUDINAL AXIS	ℓ	●	●	●	●	●	●	●	●	●
c_o	CPRMEØ	9	TOTAL WING CHORD AT OUTBOARD END OF FLAP (TRANSLATING DEVICES ONLY) MEASURED PARALLEL TO LONGITUDINAL AXIS	ℓ		●	●	●		●	●	●	
C'_{a_I}	CAPINB	9		ℓ		●	●	●		●	●	●	
$C_{a\phi}$	CAPØUT	9		ℓ				●					
$(\delta_f)_2$	DØBDEF	9		ℓ				●					
C_{2_I}	DØBCIN	–		ℓ				●					
C_{2_ϕ}	DØBCØT	–		ℓ				●					
[1] ΔC_ℓ	SCLD	9	INCREMENT IN SECTION LIFT COEFFICIENT DUE TO DEFLECTING FLAP TO THE ANGLE δ_f	ℓ				●					
[1] ΔC_{m_f}	SCMD	9	INCREMENT IN SECTION PITCHING MOMENT COEFFICIENT DUE TO DEFLECTING FLAP TO ANGLE δ_f										
c_b	CB	–	AVERAGE CHORD OF THE BALANCE	ℓ	●								
t_c	TC	–	AVERAGE THICKNESS OF THE CONTROL AT HINGE LINE	ℓ	●								
	NTYPE	–	= 1.0 ROUND NOSE FLAP	–	●								
			= 2.0 ELLIPTIC NOSE FLAP										
			= 3.0 SHARP NOSE FLAP										
	JETFLP	–	= 1.0 PURE JET FLAP	–								●	
			= 2.0 IBF										
			= 3.0 EBF										
			= 4.0 COMBINATION MECHANICAL AND PURE JET FLAP										
C_μ	CMU	–	TWO-DIMENSIONAL JET EFFLUX COEFFICIENT	–								●	
δ_j	DELJET	9	JET DEFLECTION ANGLE	DEG								●	
δ_{jeff}	EFFJET	9	EBF EFFECTIVE JET DEFLECTION ANGLE	DEG								●	

[1] OPTIONAL FOR ALL FLAP TYPES

[2] MECHANICAL FLAP TYPE IF JETFLP = 4

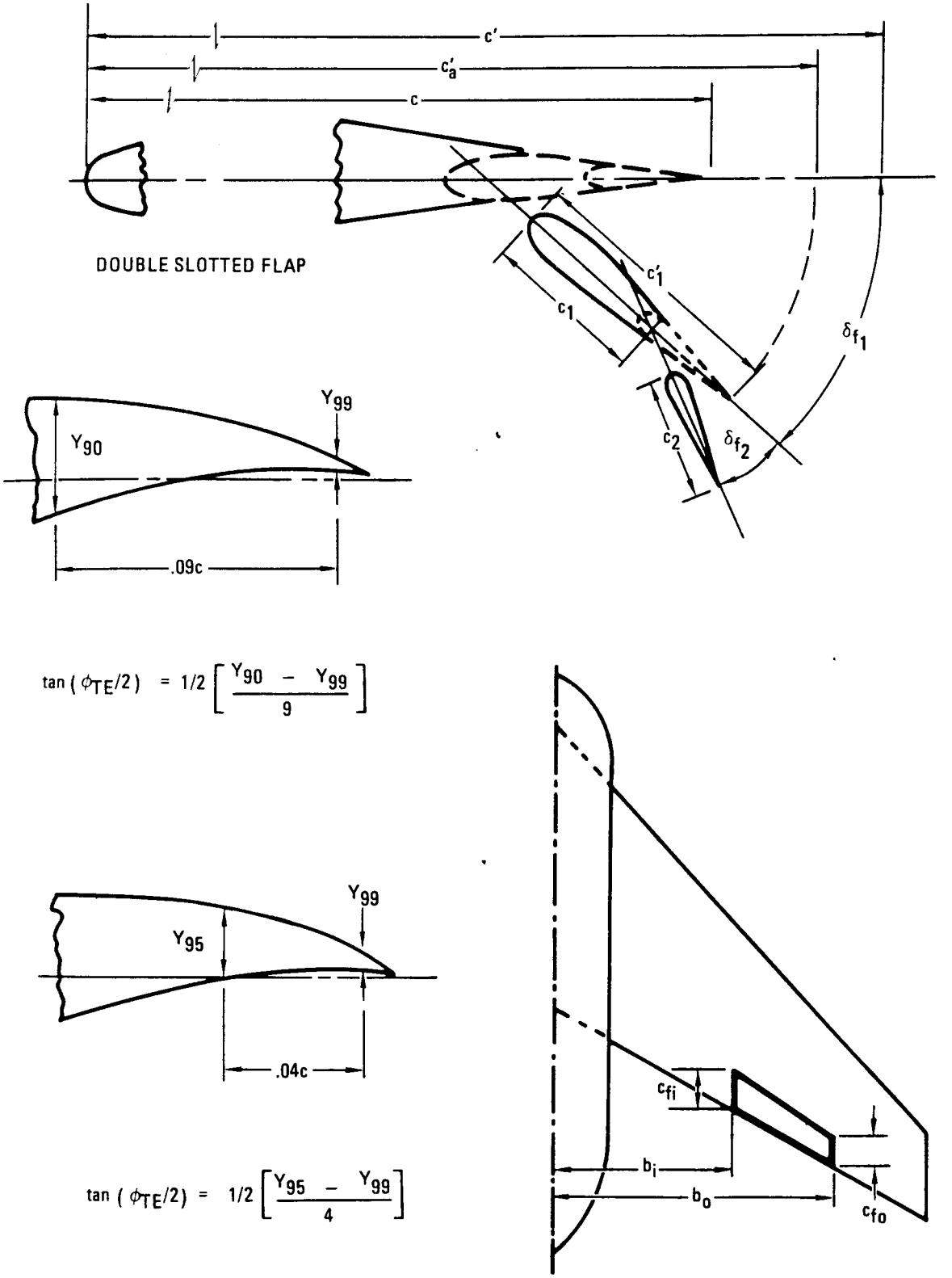

FIGURE 17 SYMMETRICAL FLAP INPUT DEFINITIONS

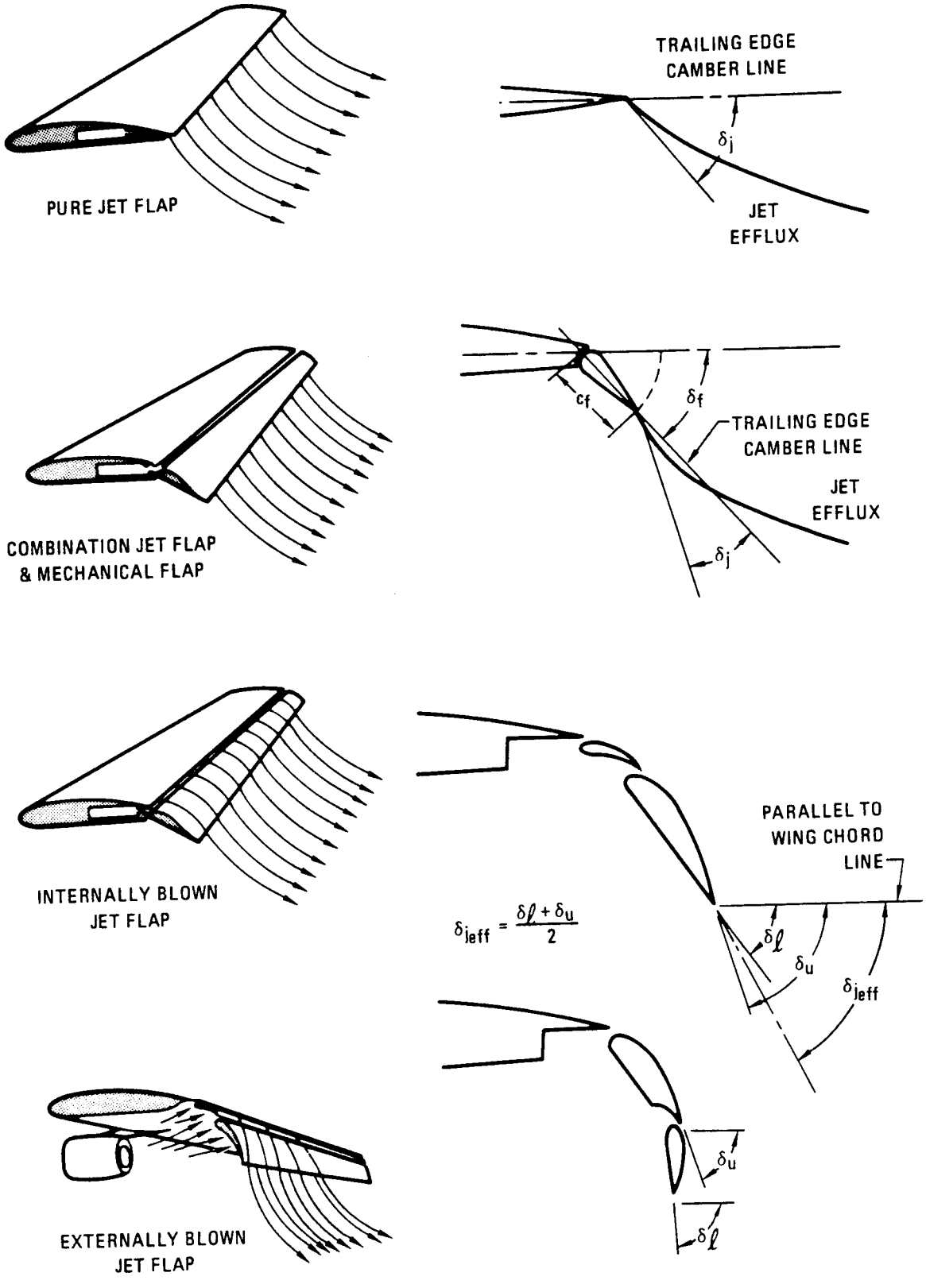

FIGURE 18 JET FLAP INPUT DEFINITIONS

NAMELIST ASYFLP

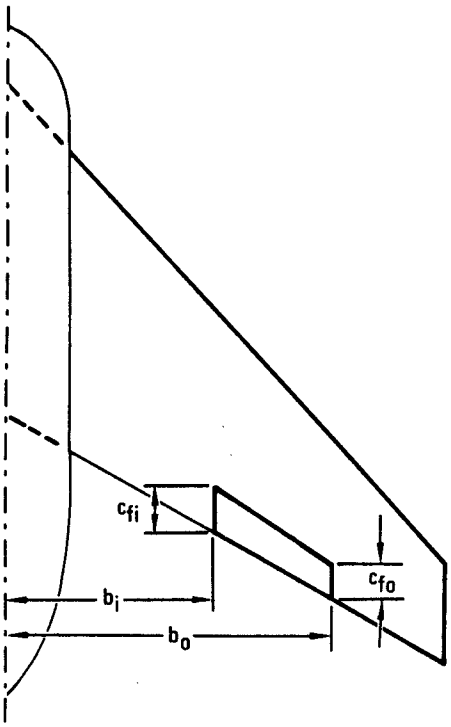

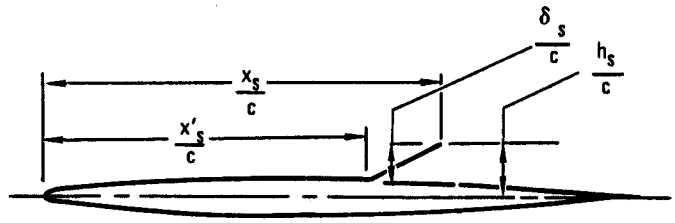

FLAP SPOILER

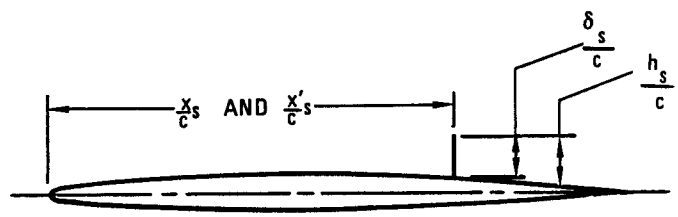

PLUG SPOILER

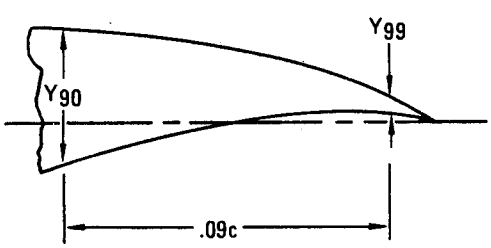

$$\tan(\phi_{TE/2}) = 1/2 \left[\frac{Y_{90} - Y_{99}}{9} \right]$$

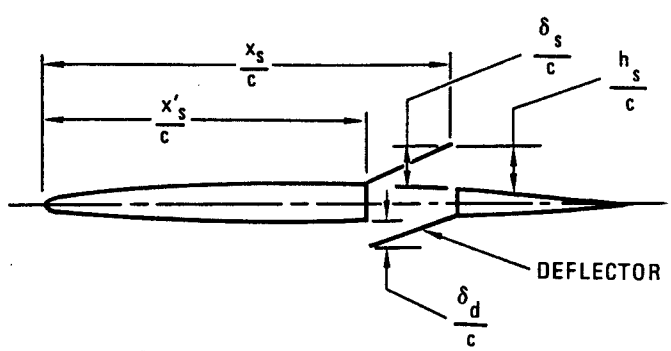

SPOILER-SLOT-DEFLECTOR

FIGURE 19 INPUT FOR NAMELIST ASYFLP – ASYMMETRICAL CONTROL DEFLECTION INPU

ENGINEERING SYMBOL	VARIABLE NAME	ARRAY DIMENSION	DEFINITION	UNITS	VARIABLES REQUIRED PER CONTROL TYPE: FLAP SPOILER ON WING	PLUG SPOILER ON WING	SPOILER-SLOT-DEFLECTOR ON WING	PLAIN FLAP AILERON	ALL MOVEABLE HORIZONTAL TAIL
	STYPE	–	= 1.0 FLAP SPOILER ON WING	–	●				
			= 2.0 PLUG SPOILER ON WING			●			
			= 3.0 SPOILER-SLOT-DEFLECTION ON WING				●		
			= 4.0 PLAIN FLAP AILERON					●	
			= 5.0 DIFFERENTIALLY DEFLECTED ALL MOVEABLE HORIZONTAL TAIL						●
	NDELTA	–	NUMBER OF CONTROL DEFLECTION ANGLES; REQUIRED FOR ALL CONTROLS, MAX. OF 9	–	●	●	●	●	●
b_i	SPANFI	–	SPAN LOCATION OF INBOARD END OF FLAP OR SPOILER CONTROL, MEASURED PERPENDICULAR TO VERTICAL PLANE OF SYMMETRY	ℓ	●	●	●	●	
b_o	SPANFϕ	–	SPAN LOCATION OF OUTBOARD END OF FLAP OR SPOILER CONTROL, MEASURED TO PERPENDICULAR TO VERTICAL PLANE OF SYMMETRY	ℓ	●	●	●	●	
$\tan(\phi TE/2)$	PHETE	–	TANGENT OF AIRFOIL TRAILING EDGE ANGLE BASED ON ORDINATES AT x/c = 0.90 AND 0.99	–	●	●	●		●
δ_L	DELTAL	9	DEFLECTION ANGLE FOR LEFT HAND PLAIN FLAP AILERON OR LEFT HAND PANEL ALL MOVEABLE HORIZONTAL TAIL, MEASURED IN VERTICAL PLANE OF SYMMETRY	DEG				●	●
δ_R	DELTAR	9	DEFLECTION ANGLE FOR RIGHT HAND PLAIN FLAP AILERON OR RIGHT HAND PANEL ALL MOVEABLE HORIZONTAL TAIL, MEASURED IN VERTICAL PLANE OF SYMMETRY	DEG				●	●
c_{f_i}	CHRDFI	–	AILERON CHORD AT INBOARD END OF PLAIN FLAP AILERON, MEASURED PARALLEL TO LONGITUDINAL AXIS	ℓ				●	
c_{f_o}	CHRDFϕ	–	AILERON CHORD AT OUTBOARD END OF PLAIN FLAP AILERON, MEASURED PARALLEL TO LONGITUDINAL AXIS	ℓ				●	
$\frac{\delta_d}{c}$	DELTAD	9	PROJECTED HEIGHT OF DEFLECTOR, SPOILER-SLOT-DEFLECTOR CONTROL; FRACTION OF CHORD	–			●		
$\frac{\delta_s}{c}$	DELTAS	9	PROJECTED HEIGHT OF SPOILER, FLAP SPOILER, PLUG SPOILER AND SPOILER-SLOT-DEFLECTOR CONTROL; FRACTION OF CHORD	–	●	●	●		
$\frac{x_s}{c}$	XSϕC	9	DISTANCE FROM WING LEADING EDGE TO SPOILER LIP MEASURED PARALLEL TO STREAMWISE WING CHORD, FLAP AND PLUG SPOILERS; FRACTION OF CHORD	–	●	●			
$\frac{x_s}{c}$	XSPRME	–	DISTANCE FROM WING LEADING EDGE TO SPOILER HINGE LINE MEASURED PARALLEL TO STREAMWISE WING CHORD, FLAP SPOILER, PLUG SPOILER AND SPOILER-SLOT-DEFLECTOR CONTROL; FRACTION OF CHORD	–	●	●	●		
$\frac{h_s}{c}$	HSϕC	9	PROJECTED HEIGHT OF SPOILER MEASURED FROM AND NORMAL TO AIRFOIL MEAN LINE, FLAP SPOILER, PLUG SPOILER AND SPOILER-SLOT-REFLECTOR; FRACTION OF CHORD	–	●	●	●		

NAMELIST LARWB

SHARP LEADING EDGE

INPUT PARAMETER - $\delta_{e_\perp}$ NOT REQUIRED IF LEADING EDGE IS ROUND

$\delta_{e_\perp}$ = EFFECTIVE WEDGE ANGLE OF SHARP LEADING EDGE WING, PERPENDICULAR TO LEADING EDGE AT $c_r/3$ FROM NOSE, DEGREES

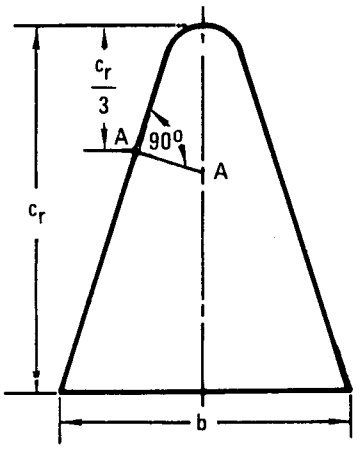

$$\delta_{e_\perp} = \delta_\perp + \delta_{L_\perp}$$

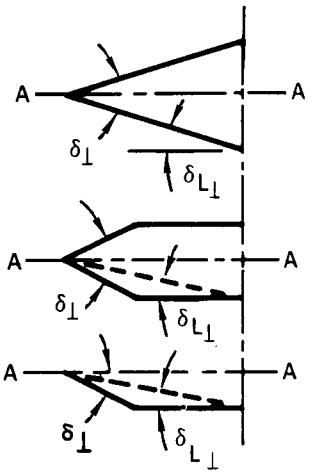

ROUND LEADING EDGE

INPUT PARAMETERS: $\left(R_{\frac{1}{3}}\ LE\right)/b$ AND δ_L (NOT REQUIRED IF LEADING EDGE IS SHARP).

$\left(R_{\frac{1}{3}}\ LE\right)/b$ = EFFECTIVE RADIUS OF ROUND LEADING EDGE WING, PERPENDICULAR TO LEADING EDGE AT $c_r/3$ FROM NOSE, DEGREES DIVIDED BY SURFACE SPAN

δ_L = LOWER SURFACE ANGLE OF ROUND LEADING EDGED WING, PERPENDICULAR TO WING LEADING EDGE AT $c_r/3$ FROM NOSE, DEGREES

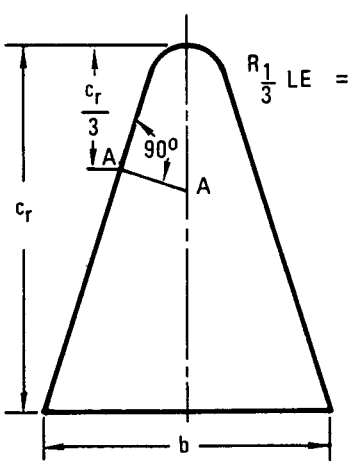

$$R_{\frac{1}{3}}\ LE = \frac{2}{3} R_1 + \frac{1}{3} R_2$$

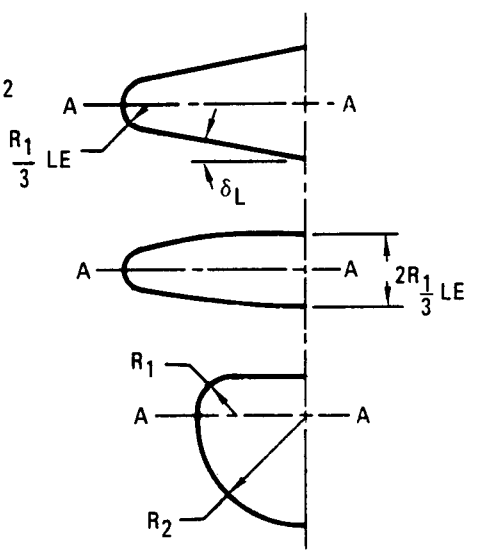

FIGURE 20 INPUT FOR NAMELIST LARWB - LOW ASPECT RATIO WING, WING-BODY INPUT

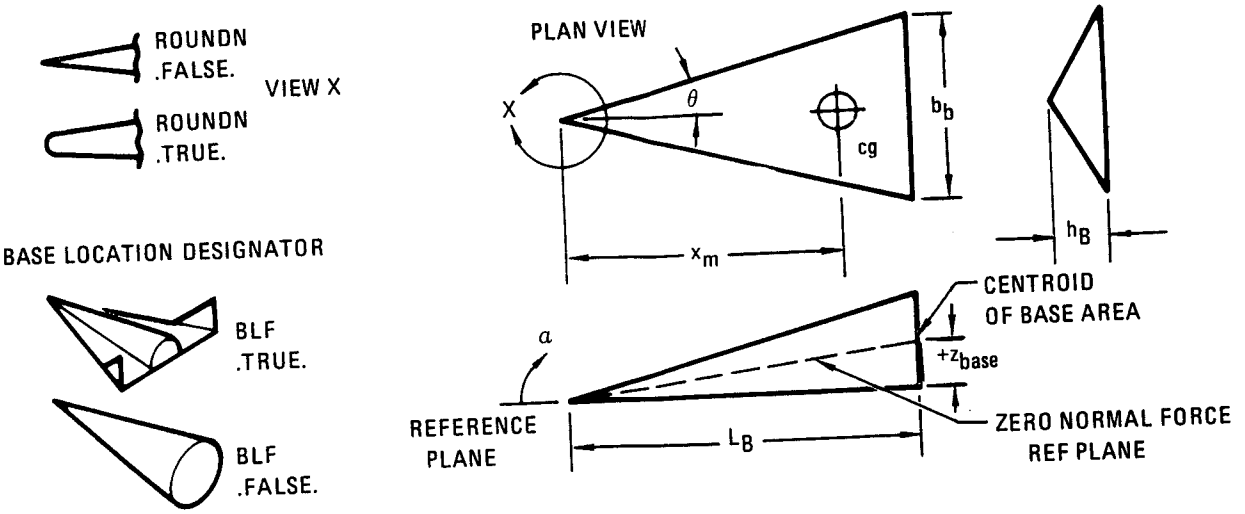

ENGINEERING SYMBOL	VARIABLE NAME	ARRAY DIMENSION	DEFINITION	UNITS
z_{base}	ZB	–	VERTICAL DISTANCE BETWEEN CENTROID OF BASE AREA AND BODY REF PLANE	ℓ
S	SREF	–	PLANFORM AREA USED AS REFERENCE AREA	A
$\delta_{e_\perp}$	DELTEP	–	SHARP LEADING EDGE PARAMETER	DEG
S_F	SFRØNT	–	PROJECTED FRONTAL AREA PERPENDICULAR TO ZERO NORMAL FORCE REF PLANE	A
A	AR	–	ASPECT RATIO OF SURFACE	–
$(R_{1/3\ LE})/b$	R3LEØB	–	ROUND LEADING EDGE PARAMETER	–
δ_L	DELTAL	–	ROUND LEADING EDGE PARAMETER	DEG
ℓ_B	L	–	LENGTH OF BODY USED AS LONGITUDINAL REF LENGTH	ℓ
S_{wet}	SWET	–	WETTED AREA, EXCLUDING BASE AREA	A
P	PERBAS	–	PERIMETER OF BASE	ℓ
S_b	SBASE	–	BASE AREA	A
h_b	HB	–	MAXIMUM HEIGHT OF BASE	ℓ
b_b	BB	–	MAXIMUM SPAN OF BASE USED AS LATERAL REF LENGTH	ℓ
BASE LOCATION DESIGNATOR	BLF	–	.TRUE. PORTIONS OF BASE ARE AFT OF NON-LIFTING SURFACE .FALSE. TOTAL BASE AFT OF LIFING SURFACE	–
x_m	XCG	–	LONGITUDINAL LOCATION OF CG FROM NOSE	ℓ
θ	THETAD	–	WING SEMI-APEX ANGLE	DEG
NOSE BLUNTNESS DESIGNATOR	RØUNDN	–	.TRUE. – ROUNDED NOSE .FALSE. – POINTED NOSE	–
S_{B_S}	SBS	–	PROJECTED SIDE AREA OF CONFIGURATION	A
$(S_{B_S})_{.2\ell_B}$	SBSLB	–	PROJECTED SIDE AREA OF CONFIGURATION FORWARD OF $.2\ell_B$	A
$x_{centroid_{S_{B_S}}}$	XCENSB	–	DISTANCE FROM NOSE OF VEHICLE TO CENTROID OF PROJECTED SIDE AREA	ℓ
$x_{centroid_W}$	XCENW	–	DISTANCE FROM NOSE OF CONFIGURATION TO CENTROID OF PLAN AREA	ℓ

NAMELIST TRNJET

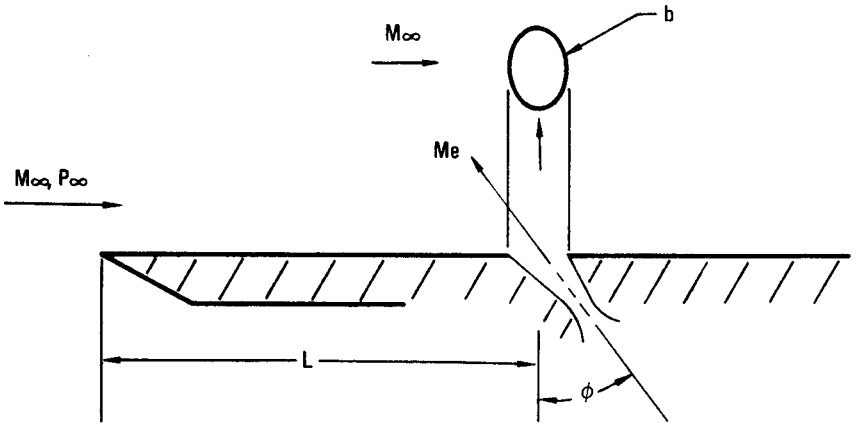

ENGINEERING SYMBOL	VARIABLE NAME	ARRAY DIMENSION	DEFINITION	UNITS
	NT	–	NUMBER OF TIME HISTORY VALUES, MAXIMUM OF 10	–
t	TIME	10	TIME HISTORY	t
F_c	FC	10	TIME HISTORY OF CONTROL FORCE REQUIRED TO TRIM	F
α_∞	ALPHA	10	TIME HISTORY OF ATTITUDE	DEG
	LAMNRJ	10	TIME HISTORY OF BOUNDARY LAYER, WHERE = .TRUE.–BOUNDARY LAYER IS LAMINAR AT JET = .FALSE.–BOUNDARY LAYER IS TURBULENT AT JET	–
b	SPAN	–	SPAN OF NOZZLE NORMAL TO FLOW DIRECTION	ℓ
ϕ	PHE	–	INCLINATION OF NOZZLE CENTER LINE RELATIVE TO AN AXIS NORMAL TO SURFACE	DEG
M_e	ME	–	NOZZLE EXIT MACH NUMBER	–
I_{sp}	ISP	–	JET VACUUM SPECIFIC IMPULSE	t
c	CC	–	NOZZLE DISCHARGE COEFFICIENT	–
γ	GP	–	SPECIFIC HEAT RATIO OF PROPELLANT	–
L	LFP	–	DISTANCE OF NOZZLE FROM PLATE LEADING EDGE	ℓ

FIGURE 21 INPUT FOR NAMELIST TRNJET – TRANSVERSE-JET CONTROL INPUT

NAMELIST HYPEFF

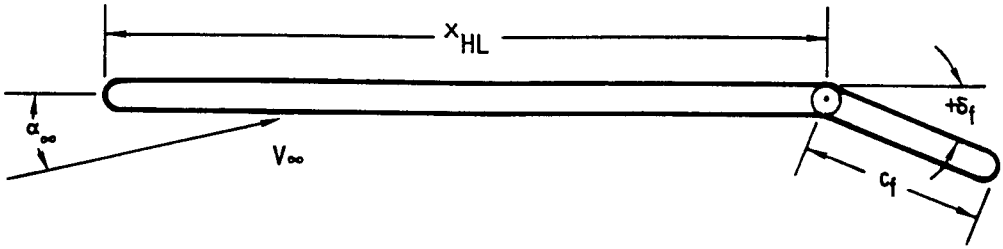

ENGINEER SYMBOL	VARIABLE NAME	ARRAY DIMENSION	DEFINITION	UNITS
ALT	ALITD	–	ALTITUDE	ℓ
x_{HL}	XHL	–	DISTANCE TO CONTROL HINGE LINE MEASURED FROM THE LEADING EDGE	ℓ
T_W/T_∞	TWØTI	–	RATIO OF WALL TEMPERATURE TO THE FREE STREAM STATIC TEMPERATURE	–
c_f	CF	–	CONTROL CHORD LENGTH	ℓ
	HNDLTA	–	NUMBER OF FLAP DEFLECTION ANGLES (MAXIMUM OF 10)	–
δ_f	HDELTA	10	CONTROL DEFLECTION ANGLE, POSITIVE TRAILING EDGE DOWN	DEG
	LAMNR	–	= .TRUE.–BOUNDARY LAYER AT HINGE LINE IS LAMINAR = .FALSE.–BOUNDARY LAYER AT HINGE LINE IS TURBULENT	–

FIGURE 22 INPUT FOR NAMELIST HYPEFF – FLAP CONTROL AT HYPERSONIC SPEEDS

TABLE 10 INPUT PARAMETER LIST NAMELIST CØNTAB

ENGR SYMBOL	VARIABLE NAME	DIM.	DEFINITION	CONTROL TAB	TRIM TAB	UNITS
	TTYPE	–	= 1 TAB CONTROL	X		–
			= 2 TRIM TAB		X	
			= 3 BOTH	X	X	
$(C_{fi})_{tc}$	CFITC	–	INBOARD CHORD, CONTROL TAB	X		ℓ
$(C_{fo})_{tc}$	CFØTC	–	OUTBOARD CHORD, CONTROL TAB	X		ℓ
$(bi)_{tc}$	BITC	–	INBOARD SPAN LOCATION CONTROL TAB	X		ℓ
$(bo)_{tc}$	BØTC	–	OUTBOARD SPAN LOCATION CONTROL TAB	X		ℓ
$(C_{fi})_{tt}$	CFITT	–	INBOARD CHORD, TRIM TAB		X	ℓ
$(C_b)_{tt}$	CFØTT	–	OUTBOARD CHORD, TRIM TAB		X	ℓ
$(b_i)_{tt}$	BITT	–	INBOARD SPAN LOCATION TRIM TAB		X	ℓ
$(b_o)_{tt}$	BØTT	–	OUTBOARD SPAN LOCATION, TRIM TAB		X	ℓ
B_1	B1	–		X		1/DEG
B_2	B2	–				1/DEG
B_3	B3	–				1/DEG
B_4	B4	–			X	1/DEG
D_1	D1	–	SEE TABLE 11	X		1/DEG
D_2	D2	–	FOR DEFINITIONS			1/DEG
D_3	D3	–				1/DEG
Gc_{max}	GCMAX	–		X	X	$1/\ell$
k	KS ⚠1	–		X		F/A-DEG
R_L	RL			X		–
β	BGR	–		X		–
Δr	DELR	–		X		–

⚠1 IF THE SYSTEM HAS A SPRING, KS INPUT, THEN FREE STREAM DYNAMIC PRESSURE IS REQUIRED

TABLE 11 SYMBOL DEFINITION

$A_c = \dfrac{S_{tc}\bar{c}_{tc}}{S_c\bar{c}_c}$

$B_1 = \left(\partial C_{h_c}/\partial\delta_c\right)_{\delta_{tc},\, a_s,\, \delta_{tt}} = (C_{h_\delta})_c$, 1/Deg (Datcom Section 6.1.6.2)

$B_2 = \left(\partial C_{h_c}/\partial\delta_{tc}\right)_{\delta_c, a_s, \delta_{tt}}$, 1/Deg, user input.

$B_3 = \left(\partial C_{h_c}/\partial a_s\right)_{\delta_c, \delta_{tc}, \delta_{tt}}$, $(C_{h_a})_c$, 1/Deg (Datcom Section 6.1.6.1)

$B_4 = \left(\partial C_{h_c}/\partial\delta_{tt}\right)_{\delta_c, \delta_{tc}, a_s}$, 1/Deg, user input.

$\bar{c}(\ )$ surface mean aerodynamic chord (movable surfaces are defined by their area aft of th hinge line, and the MAC is of that area)

$D_1 = \left(\partial C_{h_{tc}}/\partial\delta_c\right)_{\delta_{tc}, a_s}$, 1/Deg (User Input)

$D_2 = \left(\partial C_{h_{tc}}/\partial\delta_{tc}\right)_{\delta_c, a_s} = (C_{h_\delta})_{tc}$, 1/Deg (Datcom Section 6.1.6.2)

$D_3 = \left(\partial C_{h_{tc}}/\partial a_s\right)_{\delta_c, \delta_{tc}} = (C_{h_a})_{tc}$, 1/Deg (Datcom Section 6.1.6.1)

F_c control-column force (pull force is positive)

$G_{c_{max}} = \dfrac{1}{57.3\left(\dfrac{\partial x_c}{\partial\delta_c}\right)_{max}}$ maximum stick gearing user input. If $R_L = 0$, $G_{c_{max}}$ also is zero. In this case input $G_{tc_{max}}$ and $\Delta r = 1.0$ ($G_{tc_{max}} = G_{c_{max}} * \Delta r$).

$k = -\left(\dfrac{\partial M_{tc}}{\partial\delta_{tc}}\right)_{spring} \dfrac{1}{S_{tc}\bar{c}_{tc}}$ tab spring effectiveness

TABLE 11 SYMBOL DEFINITION (CONT'D)

q local dynamic pressure

R_1, R_2 shorthand notation for tab and main surface hinge moments and key linkage parameters, obtained from Table 12

R_L aerodynamic boost link ratio, user input. ($R_L \geq 0$). To input $R_L = \infty$, set $R_L < 0$.

$S(\ )$ surface area (movable surfaces are defined by their area aft of the hinge line)

a_s angle of attack of the surface to which the main control surface is attached, Deg

$\beta = \left(\frac{\partial \delta_{tc}}{\partial \delta_c}\right)_{\substack{\text{stick} \\ \text{free}}}$ with $k = \infty$ control-tab gear ratio

$\delta(\ )$ surface deflection, positive for trailing edge down or to the left, Deg

Δ_r = $-\delta_{tc_{max}}/\delta_{c_{max}}$ for a maximum control deflection (the value of Δ_r is positive because $\delta_{tc_{max}}$ and $\delta_{c_{max}}$ Will have opposite signs), user input.

When $R_L = 0$, $\Delta_r = 1.0$.

SUBSCRIPTS

c main control surface

s surface to which the main control surface is attached, i,e, horizontal tail, vertical tail, or wing

tc control tab

tt trim tab

TABLE 12 EQUATIONS FOR R_1 AND R_2

(DATCOM TABLE 6.3.4-b)

SPECIFIC TYPE OF SYSTEM	LINKAGE			R_1	R_2
	R_L	k	β		
GEARED TAB	∞	∞	F *	0	1
PURE DIRECT CONTROL	∞	∞	0	0	1
GEARED SPRING TAB	F	F	F	$\dfrac{(R_L + \Delta_r)}{R_L + \dfrac{B_2}{A_c D_2} - \dfrac{k}{qD_2}(R_L - \beta)}$	$\dfrac{-(k/qD_2)(R_L + \Delta_r)}{R_L + \dfrac{B_2}{A_c D_2} - \dfrac{k}{qD_2}(R_L - \beta)}$
SPRING TAB	F	F	0	$\dfrac{(R_L + \Delta_r)}{R_L + \dfrac{B_2}{A_c D_2} - \dfrac{k}{qD_2}(R_L)}$	$\dfrac{-(k/qD_2)(R_L + \Delta_r)}{R_L + \dfrac{B_2}{A_c D_2} - \dfrac{k}{qD_2}(R_L)}$
PLAIN LINKED TAB	F	0	0	$\dfrac{(R_L + \Delta_r)}{R_L + \dfrac{B_2}{A_c D_2}}$	0
GEARED FLYING TAB	0	F	F	$\dfrac{\Delta_r}{\dfrac{B_2}{A_c D_2} + \dfrac{k}{qD_2}\beta}$	$\dfrac{-(k/qD_2)\,\Delta_r}{\dfrac{B_2}{A_c D_2} + \dfrac{k}{qD_2}\beta}$
SPRING FLYING TAB	0	F	0	$\dfrac{\Delta_r}{\dfrac{B_2}{A_c D_2}}$	$\dfrac{-(k/qD_2)\,\Delta_r}{\dfrac{B_2}{A_c D_2}}$
PURE FLYING TAB	0	0	0	$\dfrac{\Delta_r}{\dfrac{B_2}{A_c D_2}}$	0

* F DENOTES FINITE VALUE

3.5 GROUP IV INPUT DATA

Case control cards are provided to give the user case control and optional input/output flexibility.

All Datcom control cards must start in card Column 1. The control card name cannot contain any embedded blanks unless the name consists of two words; they are then separated by a single blank. All but the case termination card (NEXT CASE) may be inserted anywhere within a case (including the middle of any namelist). Each control card is defined below and examples of their usage are illustrated in the example problems of Section 7.

3.5.1 Case Control

NAMELIST - When this card is encountered, the content of each applicable namelist is dumped for the case in the input system of units. This option is recommended if there is doubt about the input values being used, especially when the SAVE option has been used.

SAVE - When this control card is present in a case, input data for the case are preserved for use in following case. Thus, data encountered in the following case will update the saved data. Values not input in the new case will remain unchanged. Use of the SAVE card also allows minimum inputs for multiple case jobs. The total number of appearances of all namelists in consecutive SAVE cases cannot exceed 300; this includes multiple appearances of the same namelist. An error message is printed and the case is terminated if the 300 namelist limit is exceeded. Note, if both SAVE and NEXT CASE cards appear in the last input case, the last case will be executed twice.

The NACA, DERIV and DIM control cards are the only control cards affected by the SAVE card; i.e., no other control cards can be saved from case to case.

DIM FT, DIM IN, DIM M, DIM CM

When any of these cards are encountered, the input and output data are specified in the stated system of units. (See Table 8.) DIM FT is the default.

NEXT CASE - When this card is encountered, the program terminates the reading of input data and begins execution of the case. Case data are destroyed following execution of a case unless a SAVE card is present. The presence of this card behind last input case is optional.

3.5.2 Execution Control

TRIM - If this card is included in the case input, trim calculations will be performed for each subsonic Mach number within the case. A vehicle may be trimmed by deflecting a control device on the wing or horizontal tail or by deflecting an all-movable horizontal stabilizer.

DAMP - The presence of this card in a case will provide dynamic derivative results (for addressable configurations) In addition to the standard static-derivative output (see Figure 25).

NACA - This card provides in NACA airfoil section. designation (or supersonic airfoil definition) for use in the airfoil section module. It is used in conjunction with, or in place of, the airfoil section characteristics namelists, Figure 8. The airfoil section module calculates the airfoil section characteristics designated in Figure 8, and is executed if either a NACA control card is present or the variable TYPEIN is defined in the appropriate section characteristic namelist (WGSCHR, HTSCHR, VTSCHR or VFSCHR). Note that if airfoil coordinates and the NACA card are specified for the same aerodynamic surface, the airfoil coordinate specification will be used. Therefore, if coordinates have been specified in a previous case and the SAVE option is in effect, "TYPEIN" must be set equal to "UNUSED" for the presence of an NACA card to be recognized for that aerodynamic surface. The airfoil designated with card will be used for both panels of cranked or double-delta planforms.

The form of this control card and the required parameters are given below.

Card Column(s)	input(s)	Purpose
1 thru 4	NACA	The unique letters NACA designate that at airfoil is to be defined
5	Any delimiter	
6	W, H, V, or F	Planforms for which the airfoil designation applies Wing(W), Horizontal tail (H), Vertical Tail (V), or ventral Fin (F)
7	Any delimiter	
8	1, 4, 5, 6, S	Type of airfoil section; 1-series (1), 4-digit (4), 5-digit (5), 6-series (6). or supersonic (S)
9	Any delimeter	
10 thru 80	Designation	Input designation; columns are free-field (blanks are ignored)

Only fifteen (15) characters are accepted in the airfoil designation. The vocabulary consists of the numbers zero (0) through nine (9), the letter "A", and the special characters comma, period, hyphen and equal sign. Any characters input that are

not in the vocabulary list will be interpreted as the number zero (0).
Section designation input restrictions inherent to the Airfoil Section Module are presented in Table 13.

3.5.3 Output Control

CASEID - This card provides a case identification that. is printed as part of the output headings. This identification can be any user defined case title, and must appear in card columns 7 through 80.

DUMP NAME1, NAME2, ... - This card is used to print the contents of the named arrays in the foot-pound-second system of units. The arrays that can be listed and definition of their contents are given in Appendix C. For example, if the control card read was "DUMP FLC, A" the flight conditions array FLC and the wing array A would be printed prior to the conventional output. If more names are desired than can fit in the available space on one card, additional dump cards may be included.

DUMP CASE - This card is similar to the "DUMP NAME1, ..." control card. When this card is present in a case, all the arrays (defined in Appendix C) that are used during case execution are printed prior to the conventional out put. The values in the arrays are in the foot-pound-second system of units.

DUMP INPUT - This card is similar to the "DUMP CASE" card except that it forces a dump of all input data blocks used for the case.

DUMP IOM - This card is similar to the "DUMP CASE" card except that all the output arrays for the case are dumped.

DUMP ALL - This card is similar to the "DUMP CASE" card. Its use dumps all program arrays, even if not used for the case.

DERIV RAD - This card causes the static and dynamic stability der±vatives to be output in radian measure. The output will be in degree measure unless this flag is set. The flag remains set until a DERIV DEG control card is encountered, even if "NEXT CASE" cards are subsequently encountered.

DERIV DEG - This card causes the static and dynamic stability derivatives to be output in degree measure. The remaining characteristics of this control card are the same as the DERIV RAD card. DERIV DEG is the default.

PART - This card provides auxiliary and partial outputs at each Mach number in the case (see Section 6.1.8). These outputs are automatically provided for all cases at transonic Mach numbers.

BUILD - This control card provides configuration build-up data. Conventional static and dynamic stability data are output for all of the applicable basic configuration combinations shown in Table 2.

PLOT - This control card causes data generated by the program to be written to logical unit 13, which can be retained for input to the Plot Module (described in

Volume III). The format of this plot file is described in Section 5 of Volume III.

TABLE 13 AIRFOIL DESIGNATION USING THE NACA CONTROL CARD

INPUT NACA DESIGNATION	NACA SERIES AIRFOIL	RESTRICTIONS
0012	4–DIGIT	NONE
0012.25	4–DIGIT	NONE (NOTE: THICKNESS CAN BE FRACTIONAL ONLY FOR 4–DIGIT SERIES)
23118	5–DIGIT	NONE
2406–32	4–DIGIT MODIFIED	POSITION OF MAXIMUM THICKNESS MUST BE AT 20, 30, 40, 50 OR 60% CHORD
43006–65	5–DIGIT MODIFIED	POSITION OF MAXIMUM THICKNESS MUST BE AT 20, 30, 40, 50 OR 60% CHORD
16–212	1–SERIES	X FOR MINIMUM PRESSURE MUST BE .6, .8 OR .9
64–005 64–205 A=0.6 63A005 652A215 A=0.6 65,2A215 A=0.6	6–SERIES	X FOR MINIMUM PRESSURE MUST BE .3, .4, .5 OR .6 (NOTE: THE PROGRAM DOES NOT DISTINGUISH BETWEEN A 64, 2–210 AND A 64_2–210. DIFFERENCE IN COORDINATES BETWEEN THE TWO DESIGNATIONS IS NEGLIGIBLE)
S–3–30.0–2.5–40.1 ① ② ③ ④	SUPERSONIC	① SECTION TYPE 1 = DOUBLE WEDGE 2 = CIRCULAR ARC 3 = HEXAGONAL ② DISTANCE FROM L.E. TO MAX THICKNESS, % CHORD ③ MAX. THICKNESS, % CHORD ④ FOR HEXAGONAL SECTIONS, LENGTH OF SURFACE AT CONSTANT THICKNESS, % CHORD (NOTE: ALL PARAMETERS CAN BE EXPRESSED TO 0.1%; "–" DELIMETER MUST BE USED)

3.4. REPRESENTATIVE CASE SETUP

Figures 23 and 24 illustrate a typical case setup utilizing the namelists and control cards described. Though namelists (and control cards) may appear in any order (except for NEXT CASE), users are encouraged to provide inputs in the data groups outlined In this section in order to avoid one of the most common input errors - neglecting an important namelist input. The user's kit (Appendix D) has been assigned to assist the user in eliminating many common input errors, and its use is encouraged.

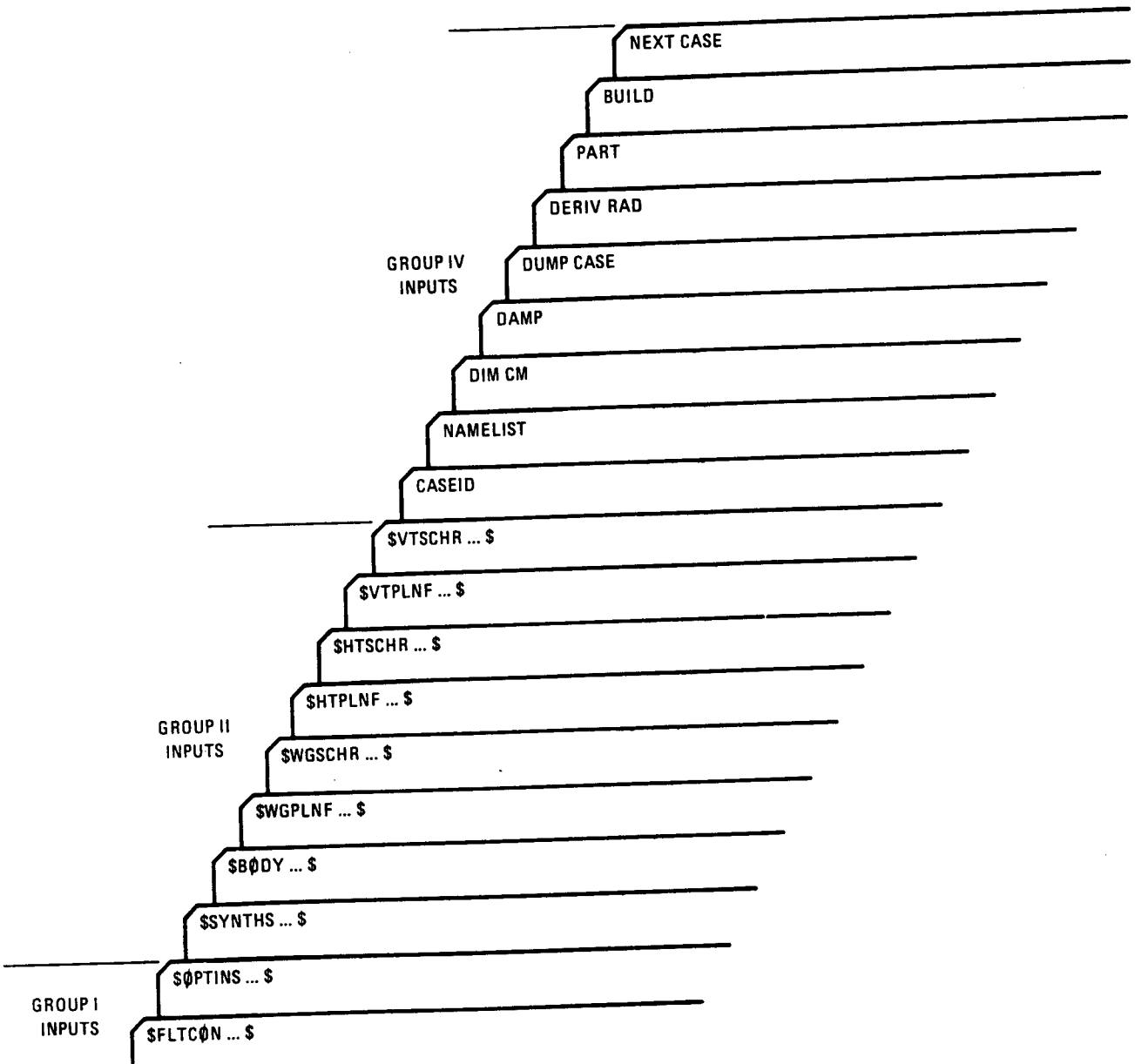

FIGURE 23 TYPICAL "CASE" SETUP

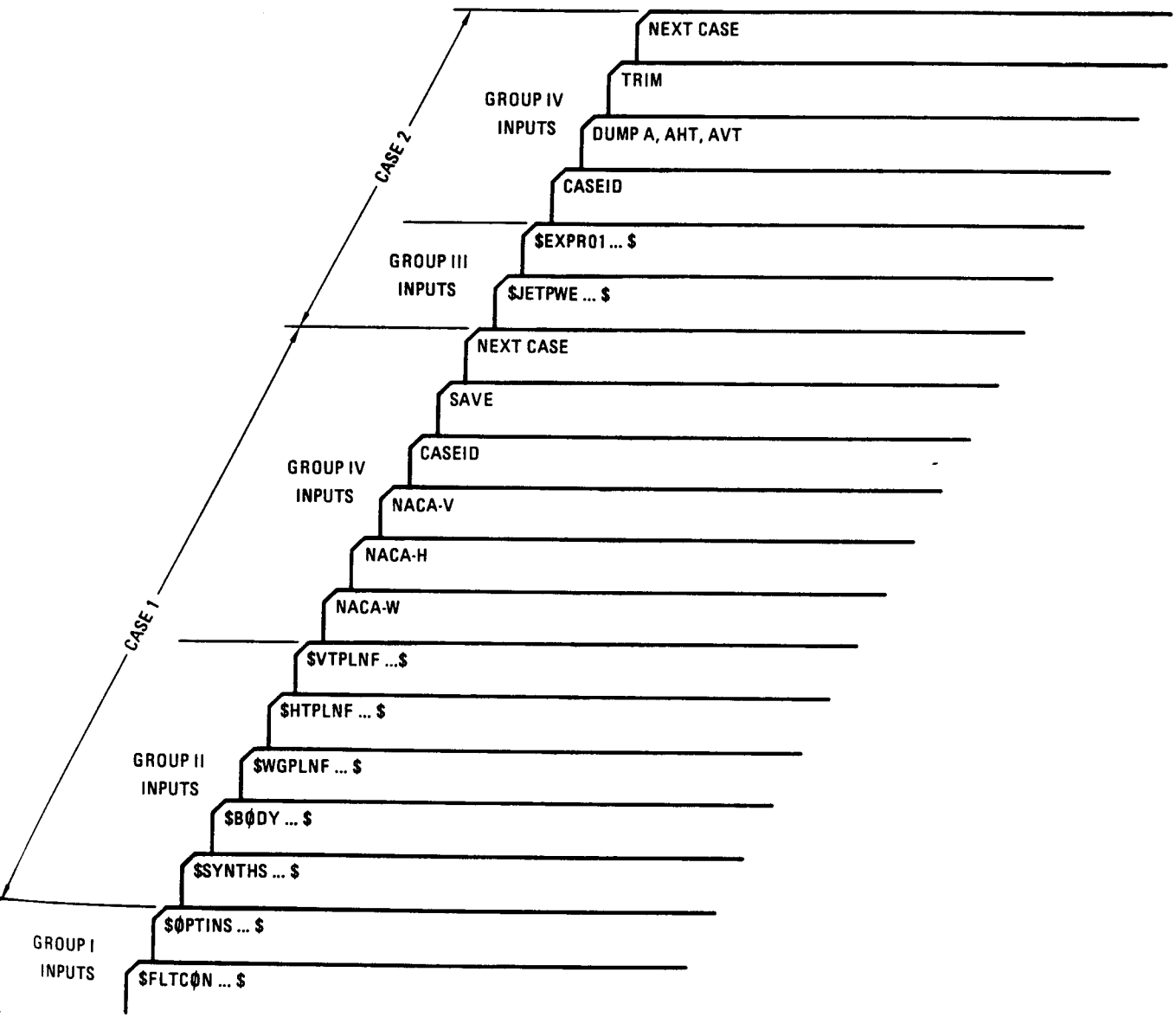

FIGURE 24 TYPICAL "STACKED CASE" SETUP

SECTION 4
BASIC CONFIGURATION MODELING TECHNIQUES

4.1 COMPONENT CONFIGURATION MODELING

Use of the Datcom methods requires engineering judgement and experience to properly model a configuration and interpret results. The same holds true in the use of the Digital Datcom program. As a convenience to the user, the program performs intermediate geometric computations (e.g., area and aspect ratio) required in method applications. The user can retrieve the values used for key geometric parameters by means of the PART and/or DUMP options, Section 3.5. The geometric inputs to the Digital Datcom program are relatively simple except for the judgement required in best representing a particular configuration. This section describes some geometry modeling techniques to appropriately model a configuration.

4.1.1 Body Modeling

The basic body geometry parameters required (regardless of speed regime) consist of the longitudinal coordinates with corresponding planform half widths, peripheries, and/or cross-sectional areas. These values are usually used in a linear sense (e.g., the trapezoidal rule is used to integrate for planform area). This implies that body-shape parameters are linearly connected. However, geometric derivatives, such as $(dS/dx)_i$, are obtained from quadratic interpolations. Proper modeling techniques which reflect a knowledge of method implementation, when used in conjunction with the PART and DUMP options, greatly enhance the program capability and accuracy.

Body methods for lift-curve slope, pitching-moment slope and drag coefficient in the transonic, supersonic, and hypersonic speed regimes require the body to be synthesized from a combination of body segments. The body segments consist of a nose segment, an afterbody segment, and a tail segment. However, in these speed regimes, lift and pitching-moment coefficients versus angle of attack are defined as functions of the body planform characteristics, and therefore are not necessarily a function of the body-segment parameters.

The program performs the configuration synthesis computations as described below. The body input parameters R, P, and S (defined in Figure 6) can reflect actual body contours. Digital Datcom will interpolate the R array at $x=l_N$, $x=l_N+l_A$, and the last input x for d_N, d_1, and d_2, respectively. Using the shape parameters B_{nose} and B_{tail} it will synthesize an “equivalent” body from the various possibilities shown in Figure 6. For example, in the center body X = lN $x=l_N$, $x=l_N+l_A$, to X = lN + la, will be treated as a cylinder with a fineness ratio of $2l_a/(d_N+d_1)$, the nose will be the shape specified by B_{nose} with a fineness ratio of l_N/d_N, etc. Thus, it is up to the user to choose l_N, l_A, B_{nose}, and B_{tail} to derive a reasonable approximation of

the actual body.
Digital Datcom requires synthesized body configurations to be either nose-alone, nose-afterbody, nose-afterbody-tail, or nose-tail (see Figure 6). The shape of the body segments is restricted as follows: nose and tail shapes must be either an ogive or cone, afterbodies must be cylindrical while tails may be either boat-tailed or flared. Additional body namelist inputs are required to define these body segments and consist of nose- and tail-shape parameters BNOSE and BTAIL and nose and afterbody length parameters BLN and BLA. In the hypersonic speed regime, the effects of nose bluntness may be obtained by specifying DS, the nose bluntness diameter.
For an example of inputs for BLN (length of nose) and BLA (length of cylindrical afterbody) as required in speed regimes other than subsonic, the reader is directed to Figure 6. Body diameters at the various segment intersections, dN, d_l, and d_2, are obtained from linear interpolation. The tail length, l_{BT}, is obtained by subtracting segments BLN and BLA from the total body length.
Most Digital Datcom analyses assume bodies are axisymmetric. Users may obtain limited results for cambered bodies of arbitrary cross section by specifying the BODY namelist optional inputs Z_U and Z_L. This option is restricted to the longitudinal stability results in the subsonic speed regime. At speeds other than subsonic, Z_U and Z_L values are ignored and axisymmetric body results are provided. It ih recommended that the reference plane for Z_U and Z_L inputs be chosen near the base area centroid.
The body modeling example problem (Section 7. problem 1) was selected specifically to illustrate modeling techniques and relevant program operations. They include:

- Choice of longitudinal coordinates that reflect body curvature and critical body intersections, i.e.. wing-body intersection, and body segmentation, if required.
- Subsonic cambered body modeling.
- Use of the DUMP option so that key parameters can be obtained with the aid of Appendix C.

4.1.2 Wing-Tail Modeling
Input data for wings, horizontal tails, vertical tails and ventral fins have been classified as either planform data or as section characteristic data, as shown in Figures 7 and 8 of Section 3. Twin-vertical panel planform input data is shown in Figure 15.
Classification of nonstraight-tapered wings and horizontal tails as either cranked (aspect ratio > 3) or double delta (aspect ratio < 3) is relevant to only the subsonic speed regime. In this speed regime, the appropriate lift and drag prediction

methods depend on the classification of the lifting surface. Digital Datcom executes subsonic analyses according to the user-specified classification regardless of the surface aspect ratio. However, if the surface is inappropriately designated, a warning message is printed.

Dihedral angle inputs are used primarily in the lateral stability methods. The longitudinal stability methods reflect only the effects of dihedral in the downwash and ground effect calculations. The direct effects of dihedral on the primary lift of horizontal surfaces are not defined in Datcom and are therefore not included in Digital Datcom.

Digital Datcom wing or horizontal tail alone analysis requires the exposed semispan and the theoretical semispan to be set to the same value in namelist WGPLNF and HTPLNF. The input wing root chord should be consistent with the chosen semispan. The reference parameters in namelist OPTINS should be used to specify reference parameters corresponding to other than the theoretical wing planform. If the reference parameters are not specified, they are evaluated using the theoretical wing inputs and the reference area is set as the wing theoretical area, the longitudinal reference length as the wing mean aerodynamic chord, and the lateral reference length is set as the wing span.

Horizontal tail input parameters SVWB, WVB, and SVHB, as well as vertical tail input parameters SHB, SEXT, and RLPH, are required only for the supersonic and hypersonic speed regimes. They are used in calculation of lateral-stability derivatives. If these data are not input, the program will calculate them, but will fail if any part of the exposed root chord lies off of the body; lateral stability calculations are not performed if this occurs.

Two-dimensional airfoil section characteristic data for wings and tails are input via namelists WGSCHR, HTSCHR, VTSCHR, and VFSCHR, or may be calculated using the airfoil section module. On occasion, the section characteristics cannot be explicitly defined because airfoil sections either vary with span (an average airfoil section may be specified), or the planform is not straight tapered and has different airfoil sections between the panels. In such circumstances, inputs should be estimated after reviewing existing airfoil test data. Sensitivity of program results to the estimated section characteristics can be readily evaluated by performing parametric studies utilizing the SAVE and NEXT CASE options defined in Section 3.5. Users are warned that airfoil sensitivities do exist for low Reynolds numbers, i.e., on the order of 100,000. These namelists can also be used to specify the aspect ratio criteria using “ARCL” (Table 9).

Planform geometry, section characteristic parameters, and synthesis dimensions for twin vertical panels are input via namelist TVTPAN. The effects of such panels are reflected in only the subsonic lateral-stability output. The panels may be located either on the wing or on the horizontal tail.

4.2 MULTIPLE COMPONENT MODELING

Combinations of aerodynamic components must be synthesized in namelist SYNTHS. However, the program makes no cross checks in assembly of components for configuration analysis. The user must confirm the geometry inputs to assure consistency of dimensions and component locations in total configuration representation.

4.2.1 Wing-Body-Tail-body Modeling

Body values employed in wing-body computations are not the same as body-alone results but are obtained by performing body-alone analysis for that portion of the body forward of the exposed root chord of the wing. User supplied body data, input via the namelist EXPRnn, will be used in lieu of the "nose segment" data calculated. Carryover factors are a function of the ratio of body diameter to wing span, as obtained from the wing input data, i.e., the body diameter is taken as twice the difference of the exposed semispan and the theoretical semispan. Hence, the body radius input in namelist BODY does not affect the interference parameters.

4.2.2 Wing-Body-Tail Modeling

A conventional "aircraft" configuration is modeled using the body, wing, horizontal tail, and vertical tail modeling techniques previously described. Wing downwash data are required to complete analysis of configurations with a wing and horizontal tail. Subsonic and supersonic downwash data are calculated for straight-tapered wings. For other wing planforms, or at transonic Mach numbers, the downwash data (q_H/q_∞, ϵ, and $d\epsilon/d\alpha$) must be supplied using the experimental data substitution option, though two alternatives are suggested:

6. Actual data, or from a wing-body-tail configuration which has an "equivalent" straight tapered wing, or
7. Defining an "equivalent" straight tapered wing and substituting the wing-body results obtained from the previous Digital Datcom run to obtain the best analytical estimate of the configuration.
8.

Body-canard-wing configurations are simulated using the standard body-wing-tail inputs. The forward surface (canard) is input as the wing, and the aft lifting surface as the horizontal tail. Digital Datcom checks the relative span of the wing and horizontal tail to determine if the configuration is a conventional wing-body-tail or a canard configuration.

4.2.3 Configuration Build-up Considerations

Section 3.5 describes multiple case control cards which simplify inputs for parametric and configuration build-ups. There are a few items to keep in mind.

The effect of omitting an input variable or setting its value to zero may not be the same, since all inputs are initialized to “UNUSED”, 1.0E-60 for CDC computers. However, the “UNUSED” value say be used to give the effect of an input variable being omitted. For example, If “KSHARP” in namelist WGSCHR was specified in a previous SAVE case, a subsequent case could specify “KSHARP = 1.0E-60" (for CDC computers) which would result in KSHARP being omitted in the subsequent case. In many places Digital Datcom uses the presence of a namelist for program control. For example, the program assumes a body has been input if the namelist BODY exists in a case. The effects of a presence of a namelist, through case input or a SAVE card, cannot be eliminated even if all input volume are set to “UNUSED.” The only exception to this rule involves high-lift and control input. Either namelist SYMFLP or ASYFLP way be specified in a case, but not both. In a case sequence involving namelist SYMFLP and a SAVE card, followed by another case where ASYFLP is specified, the ASYFLP analysis will be performed and the previous SYMFLF input ignored.

4.3 DYNAMIC DERIVATIVES

Digital Datcom computes dynamic derivatives for body, wing, wing-body, end wing-body-tall configurations for subsonic, transonic, and supersonic speeds. In addition, body-alone derivatives are available at hypersonic speeds. There is no special namelist input associated with dynamic derivatives. Use of the DUMP control card discussed in Section 3.5 will initiate computation. If experimental data are input, the dynamic derivative methods will employ the relevant experimental data. Dynamic derivative solutions are proviled for basic geometry only. and the effects of high-lift and control devices are not recognized.

The experimental data option of the program permits the user to substitute experimental data for key static stability parameters involved in dynamic derivative solutions such as body C_L, wing-body C_L, etc. Any improvement in the accuracy of these parameters will produce significant improvement in the dynamic stability estimates. Use of experimental data substitution for this purpose is strongly recommended.

4.4 TRIM OPTION

Digital Datcom provides a trim option allows users to obtain longitudinal trim data. Two types of capability are provided: control device on wing or tail (Section 3.4) and the all-movable horizontal stabilizer. Trim with a control device on the wing or tail is activated by the presence of the namelist SYMFLP (Section 3.4) and TRIM control card (Section 3.5) In the same case. Output consists of aerodynamic increments associated with each flap deflection; similar output is provided at trim deflection angles. The trim output is generated as follows the undeflected total configuration moment at each angle of attack is compared with

the incremental moments generated from SYMFLP input. Once the incremental moment is reached, the corresponding deflection angle is the trim deflection angle. The trim deflection is then used as the independent variable in table look-ups for the remaining increments, such as C_L and C_D. The user should specify a liberal range of flap deflection angles when using the control device trim option.

4.5 SUBSTITUTION OF EXPERIMENTAL DATA

Users have the option of substituting certain experimental data that will be used in lieu of Digital Datcon results. The experimental data are used in subsequent configuration analysis, e.g., body data are used in the wing-body and wing-body-tail calculations. Experimental data are input via namelist EXPRnn, Figure 11. All specified parameters must be based on the same reference area and length used by Digital Datcom.

In the transonic Mach regime, some Datcom methods are available that require user supplied data to complete the calculations. For example, Datcom methods are given that define wing Ct,/CL and CDL/CL 2 although methods are not available for C_L. If the wing lift coefficient is supplied using experiental data substitution, C_L and C_D can be calculated at each angle of attack for which C_L is given. The additional transonic data that can be calculatcd, and the “experimental” data required, are defined in Figure 10.

SECTION 5
ADDITIONAL CONFIGURATION MODELING TECHNIQUES

5.1 HIGH-LIFT AND CONTROL CONFIGURATIONS

Control-device input data for symmetrical and asymmetrical deflections are contained in namelist SYMFLP and ASYFLP respectively. Analysis is limited to either symmetrical or asymmetrical results in any one case. Multiple case runs involving SAVE cards, may interchange symmetrical and asymmetrical analyses from case to case. Only one control device, on either the wing or horizontal tail, may be analyzed per case. If a wing or wing-body case is run, flap input automatically refers to the wing geometry. However, if a wing-body-horizontal-tail case is input, flap input data refer to the horizontal tail. Multiple-device analysis must be performed manually by using the experimental-data input option. Symmetrical and asymmetrical flap analysis (namelists SYMFLP and ASYFLP) are not performed in the hypersonic speed regime (hypersonic flap effectiveness inputs are made via namelist HYPEFF). No distinction is made between high lift devices and control devices within the program. For instance, trim data may be obtained with any device for which the pitching moment increment is output, with the exception of leading edge flaps. Jet flap analysis assume the flaps are on the wing and the increments are for a wing-body configuration.

5.2 POWER AND GROUND EFFECTS

Input parameters required to calculate the effects of propeller power, jet power, and ground proximity on the subsonic longitudinal-stability results are input via namelists PKOPWR, JETPWR, and GRNDEF. The effects of power or ground proximity on the static longitudinal stability results way be obtained for any wing-body or wing-body-horizontal. tail-and/or vertical
tail configuration. Output consists of lift, drag, and pitching moment coefficients that include the effects of power or ground proximity. Ground effect output may be obtained at a maximum of ten different ground heights. It should be noted that the of ground height usually become negligible when the ground height exceeds the wing span.

The effects of ground proximity on a wing-body configuration with symmetrical flaps can be calculated for as many as nine flap deflections at each ground height. The required data are input via namelists GRNDEF and SYMFLP.

5.3 LOW-ASPECT-RATIO WING OR WING-BODY

The Datcom provides special methods to analyze low aspect ratio wing and wing-body combinations (lifting-body vehicles) in the subsonic speed regime. Parameters required to calculate the subsonic longitudinal and lateral results for lifting bodies are input via namelist LARWB. Digital Datcom output provides

longitudinal coefficients C_L, C_D, C_N, C_A, and C_m and the derivatives

$$C_{L_\alpha}, C_{m_\alpha}, C_{Y_\beta}, \text{and } C_{l_\beta}$$

5.4 TRANSVERSE-JET CONTROL EFFECTIVENESS

A flat plate equipped with a transverse-jet control system and corresponding input data requirements for namelist TRNJET is shown in Figure 21. The free stream Mach number, Reynolds number, and pressure are defined via namelist FLTCON, Figure 3. Estimates for the required control force can be made on the assumption that the center of pressure is at the nozzle. The predicted center of pressure location is calculated by the program and obtained by dumping the JET array. If the calculated center of pressure location disagrees with the assumption, a refinement of input data may be necessary

5.5 FLAP CONTROL EFFECTIVENESS AT HYPERSONIC SPEEDS

A flat plate with a flap control is shown in Figure 22 along with input namelist HYPFLP. Force and moment data are predicted assuming a two-dimensional flow field. Oblique shock relations are used in describing the flow field.

SECTION 6
DEFINITION OF OUTPUT

Digital Datcom results are output at the Mach numbers specified in namelist FLTCON. At each Mach number, output consists of a general heading, reference parameters, input error messages, array dumps, and specific aerodynamic characteristics as a function of angle of attack and/or flap deflection angle. Separate output formats are provided for the following sets of related aerodynamic data: static longitudinal and lateral stability, dynamic derivatives, high lift and control, trim option, transverse-jet effectiveness, and control effectiveness at hypersonic speeds. Since computer output is limited symbolically, definitions for the output symbols used within the related output sets are given. The Datcom engineering symbol follows the output symbol notation when appropriate, Unless otherwise noted, all results are presented in the stability axis coordinate system.

6.1 STATIC AND DYNAMIC STABILITY OUTPUT

The primary outputs of Digital Datcom are the static and dynamic stability data for a configuration. An example of this output is shown in Figure 25. Definitions of the output notations are given below.

6.1.1 General headings

Case identification information is contained in the output heading and consists of the following: the version of Datcom from which the program methodologies are derived, the type of vehicle configuration (e.g. body alone or wing-body) for which aerodynamic characteristics are output, and supplemental user-specified case identification information if the CASEID control card is used.

6.1.2 Reference Parameters

Reference parameters and flight-condition output are defined as follows:

- MACH NUMBER - Mach at which output was calculated. This parameter is user-specified In namelist FLTCON, or calculated from the altitude and velocity inputs.
- ALTITUDE - Altitude (if user input) at which Reynolds number was calculated. This optional parameter is user specified in namelist FLTCON.
- VELOCITY - Freestream velocity (if user input) at which Mach number and Reynolds number was calculated. This optional parameter is user specified in namelist FLTCON.
- PRESSURE - Freestream atmospheric pressure at which output was calculated (function of altitude). This parameter can also be user specified in namelist FLTCON.
- TEMPERATURE - Freestream atmospheric temperature at which output was calculated (function of altitude). This parameter can also be user specified in namelist FLTCON.

- REYNOLDS NO. - This flight condition parameter is the Reynolds number per unit length and is user-specified (or input) in namelist FLTCON.
- REFERENCE AREA - Digital Datcom aerodynamic characteristics are based on this reference area. It is either user-specified in namelist OPTINS or is equal to the planform area of the theoretical wing.
- REFERENCE LENGTH - LONGITUDINAL - The Digital Datcom pitching moment coefficient is based on this reference length. It is either user-specified in namelist OPTINS or is equal to the mean aerodynamic chord of the theoretical wing.
- REFERENCE LENGTH - LATERAL - The Digital Datcom yawing-moment and rolling-moment derivatives are based on this reference length. It is either user-specified in namelist OPTINS or is set equal to the wing span.
- MOMENT REFERENCE CENTER - The moment reference center location for vehicle moments (and rotations). It is user-specified in namelist SYNTHS and output as X_{CG}(HORIZ) and Z_{CG}(VERT).
- ALPHA - This is the angle-of-attack array that is user specified in namelist FLTCON. The angles are expressed in degrees.

AUTOMATED STABILITY AND CONTROL METHODS PER APRIL 1976 VERSION OF DATCOM
CHARACTERISTICS AT ANGLE OF ATTACK AND IN SIDESLIP
WING-BODY CONFIGURATION
BODY-WING DAMPING DERIVATIVES

FLIGHT CONDITIONS						REFERENCE DIMENSIONS				
MACH NUMBER	ALTITUDE FT	VELOCITY FT/SEC	PRESSURE LB/FT**2	TEMPERATURE DEG R	REYNOLDS NUMBER 1/FT	REF. AREA FT**2	REFERENCE LENGTH LONG. FT	LAT. FT	MOMENT REF. CENTER HORIZ FT	VERT FT
.600					4.2600E+06	2.250	.822	3.000	2.600	0.000

							DERIVATIVE (PER DEGREE)				
ALPHA	CD	CL	CM	CN	CA	XCP	CLA	CMA	CYB	CNB	CLB
-2.0	.017	-.126	-.0106	-.126	.012	.084	6.285E-02	5.405E-03	-1.702E-03	-1.882E-03	5.532E-04
0.0	.015	0.000	0.0000	0.000	.015	******	6.285E-02	5.222E-03			0.
2.0	.017	.126	.0103	.126	.012	.081	6.317E-02	5.020E-03			-5.532E-04
4.0	.023	.253	.0201	.254	.006	.079	6.348E-02	4.731E-03			-1.112E-03
8.0	.050	.506	.0376	.508	-.021	.074	6.252E-02	3.984E-03			-2.229E-03
12.0	.093	.753	.0519	.756	-.065	.069	5.430E-02	2.924E-03			-3.313E-03
16.0	.139	.941	.0610	.943	-.126	.065	3.708E-02	1.631E-03			-4.141E-03
20.0	.172	1.049	.0650	1.045	-.197	.062	1.522E-02	5.058E-04			-4.619E-03
24.0	.185	1.063	.0650	1.046	-.264	.062	-8.650E-03	-4.958E-04			-4.677E-03

AUTOMATED STABILITY AND CONTROL METHODS PER APRIL 1976 VERSION OF DATCOM
DYNAMIC DERIVATIVES
WING-BODY CONFIGURATION
BODY-WING DAMPING DERIVATIVES

FLIGHT CONDITIONS						REFERENCE DIMENSIONS				
MACH NUMBER	ALTITUDE FT	VELOCITY FT/SEC	PRESSURE LB/FT**2	TEMPERATURE DEG R	REYNOLDS NUMBER 1/FT	REF. AREA FT**2	REFERENCE LENGTH LONG. FT	LAT. FT	MOMENT REF. CENTER HORIZ FT	VERT FT
.600					4.2600E+06	2.250	.822	3.000	2.600	0.000

DYNAMIC DERIVATIVES (PER DEGREE)

	PITCHING		ACCELERATION		ROLLING			YAWING	
ALPHA	CLQ	CMQ	CLAD	CMAD	CLP	CYP	CNP	CNR	CLR
-2.00	3.684E-02	-3.018E-02	NDM	NDM	-5.150E-03	-4.280E-04	1.710E-05	-7.354E-05	-6.158E-04
0.00					-5.144E-03	0.	0.	-6.008E-05	0.
2.00					-5.158E-03	4.277E-04	-1.684E-05	-7.354E-05	6.158E-04
4.00					-5.163E-03	8.653E-04	-3.751E-05	-1.141E-04	1.233E-03
8.00					-5.075E-03	1.801E-03	-1.138E-04	-2.739E-04	2.454E-03
12.00					-4.419E-03	3.059E-03	-4.015E-04	-5.252E-04	3.619E-03
16.00					-3.007E-03	4.696E-03	-9.863E-04	-7.702E-04	4.472E-03
20.00					-1.165E-03	6.594E-03	-1.702E-03	-9.154E-04	4.908E-03
24.00					9.176E-04	8.727E-03	-2.224E-03	-8.941E-04	4.846E-03

*** NDM PRINTED WHEN NO DATCOM METHODS EXIST

FIGURE 25 DIGITAL DATCOM STATIC AND DYNAMIC STABILITY OUTPUT

6.1.3 Static Longitudinal and Lateral Stability

Not all of the static aerodynamic- characteristics shown in Figure 25 are calculated for each combination of vehicle configuration and speed regime, Digital Datcom methods are not always available. Aerodynamic characteristics that are available as output from Digital Datcom are presented in Table 2 as a function of vehicle configuration and speed regime. Additional constraints are imposed on some derivatives; the user should consult the Methods Summary in Section 1 of the USAF Stability and Control Datcom Handbook. The stability derivatives are expressed per degree or per radian at the users option (see Section 3.5).

- CD - Vehicle drag coefficient based on the reference area and presented an a function of angle of attack. If Datcom methods are available to calculate zero-lift drag but not to calculate CD versus alpha, the value of CD is printed as output at the first alpha. CD is positive when the drag is an aft acting load.
- CL - Vehicle lift coefficient based on the reference area and presented as a function of angle of attack. CL is positive when the lift is an up acting load.
- CM - Vehicle pitching-moment coefficient based on the reference area and longitudinal reference length and presented as a function of angle of attack. Positive pitching moment causes a nose-up vehicle rotation.
- CN - Vehicle (body axis) normal-force coefficient based on the reference area and presented as a function of angle of attack. CN is positive when the normal force is in the +Z direction. Refer to Figure 5 for Z-axis definition.
- CA - Vehicle (body axis) axial-force coefficient based on the reference area and presented as a function of angle of attack. CA Is positive when the axial force is in the +X direction. Refer to Figure 5 for X-axis definition.
- XCP - The distance between the vehicle moment reference center and the center of pressure divided by the longitudinal reference length. Positive is a location forward of the center of gravity. If output is given only for the first angle of attack, or for those cases where pitching moment (CM)is not computed, the value(s) define the aerodynamic-center location; i.e., XCP= dCm/dCL - (XCG-Xac) /c
- CLA - Derivative of lift coefficient with respect to alpha. If CLA is output versus angle of attack, these values correspond to numerical derivatives of the lift curve. When a single value of CLA is output at the first angle of attack, this output is the linear-lift-region derivative. CLA is based on the reference area.
- CMA - Derivative of the pitching-moment coefficient with respect to alpha. If CMA is output versus angle of attack, the values correspond to numerical derivatives of the pitching-moment curve. When a single value of CMA is

output at the first angle of attack, this output is the linear-lift-region derivative. CMA is based on the reference area and longitudinal reference length.

- CYB - Derivative of side-force coefficient with respect to sideslip angle. When CYB in defined independent of the angle of attack, output is printed at the first angle of attack. CYB is based on the reference area.
- CNB - Derivative of yawing-moment coefficient with respect to sideslip angle. When CNB is defined independent of angle of attack, output is printed at the first angle of attack. CNB is based on the reference area and lateral reference length.
- CLB - Derivative of rolling-moment coefficient with respect to sideslip angle presented as a function of angle of attack. CLB is based on the reference area and lateral reference length.
- • Q/QINF - Ratio of dynamic pressure at the horizontal tail to the freestream value presented an a function of angle of attack. When a single value of Q/QINF is output at the first angle of attack, this output is the linear-lift-region value.
- EPSILON - Downwash angle at horizontal tail expressed in degrees. Downwash angle has the same algebraic sign as the lift coefficient. Positive downwash implies that the local angle of attack of the horizontal tail is less than the free-stream angle of attack.
- D(EPSLON)/D(ALPHA) - Derivative of downwash angle with respect to angle of attack. When a single value of D(EPSLON)/ D(ALPHA) is output at the first angle of attack, it corresponds to the linear-lift-region derivative.

6.1.4 Dynamic Derivatives

Not all of the dynamic derivatives shown in Figure 25 are calculated for each combination of vehicle configuration and speed regime because of Datcom limitations. Aerodynamic characteristics that are available as output from Digital Datcom are presented in Table 2 as a function of vehicle configuration and speed regime. See the Datcom Handbook, Section 1, for additional restrictions. Dynamic stability derivatives are expressed per degree or per radian at the users option (see Section 3.5).

- CLQ - Vehicle pitching derivative based on the product of reference area and longitudinal reference length.
- CMQ - Vehicle pitching derivative based on the product of reference area and the square of the longitudinal reference length.
- CLAD - Vehicle acceleration derivative based on the product of reference area and longitudinal reference length.

- CMAD - Vehicle acceleration derivative based on the product of reference area and the square of the longitudinal reference length.
- CLP - Vehicle rolling derivative based on the product of reference area and the square of the lateral reference length.
- CYP - Vehicle rolling derivative based an the product of reference area and lateral reference length.
- CNP - Vehicle rolling derivative based on the product of reference area and the square of the lateral reference length.
- CNR - Vehicle yawing derivative based on the product of reference area and the square of the lateral reference length.
- CLR - Vehicle rolling derivative based on the product of reference area and the square of the lateral reference length.

6.1.5 High Lift and Control

This output consists of two basic categories: symmetrical deflection of high lift and/or control devices, and asymmetrical control surfaces. The high lift/control data follow the same sign convention an the static aerodynamic coefficients. Available output is presented in Table 3 as a function of speed regime and control type. Users are urged to consult the Datcom for limitations and constraints imposed upon these characteristics. Output obtained from symmetrical flap analysis are as follows.

- DELTA - Control-surface streamwise deflection angle. Positive trailing edge down. Values of this array are user-specified in namelist SYMFLP.
- D(CL) - Incremental lift coefficient in the linear-lift angle-of-attack range due to deflection of control surface. Based on reference area and presented as a function of deflection angle.
- D(CM) - Incremental pitching-moment coefficient due to control surface deflection valid in the linear lift angle-of-attack range. Based on the product of reference area and longitudinal reference length. Output is a function of deflection angle.
- D(CL MAX) - Incremental maximum-lift coefficient. Based on reference area and presented as a function of deflection angle.
- D(CD MIN) - Incremental minimum drag coefficient due to control or flap deflection. Based on reference area and presented as a function of deflection angle.
- D(CDI) - Incremental induced-drag coefficient due to flap deflection based on reference area and presented as a function of angle-of-attack and deflection angle.
- (CLA)D - Lift-curve slope of the deflected, translated surface based on reference area and presented as a function of deflection angle.

- (CH)A - Control-surface hinge-moment derivative due to angle of attack based on the product of the control surface area and the control surface chord, S_cC_c. A positive hinge moment will tend to rotate the flap trailing edge down.
- (CH)D - Control-surface hinge-moment derivative due to control deflection based on the product of the control surface area and the control surface chord. A positive hinge moment will tend to rotate the flap trailing edge down.

Output obtained from asymmetrical control surfaces are given below. Left and right are related to a forward facing observer:

- DELTAL - Left lifting surface streamwise control deflection angle. Positive trailing edge down. Values in this array are user-specified in namelist ASYFLP.
- DELTAR - Right lifting-surface streamwise control deflection angle . Positive trailing edge down. Values in this array are user-specified in namelist ASYFLP.
- XS/C - Streamwise distance from wing leading edge to spoiler lip. Values in this array are input via namelist ASYFLP, Figure 19.
- HS/C - Projected height of spoiler measured from and normal to airfoil mean line. Values in this array are input via namelist ASYFLP.
- DD/C - Projected height of deflector for spoiler-slot-deflector control. Values in this array are input via namelist ASYFLP.
- DS/C - Projected height of spoiler control. Values in this array are input via namelist ASYFLP.
- (CL) ROLL - Incremental rolling moment coefficient due to asymmetrical deflection of control surface based on the product of reference area and lateral reference length. Positive rolling moment is right wing down.
- CN - Incremental yawing-moment coefficient due to asymmetrical deflection of control surface based on the product of reference area and lateral reference length. Positive yawing moment is nose right.

6.1.6 Trim Option

The Digital Datcom trim option provides subsonic longitudinal characteristics at the calculated trim deflection angle of the control device. The trim calculations assume unaccelerated flight; i.e., the static pitching moment is set to zero without accounting for any contribution from a non-zero pitch rate. Trim output is also provided for an all-movable horizontal stabilizer at subsonic speeds. These data include untrimmed stabilizer coefficients CD, CL, Cm, and the hinge moment

coefficients, stabilizer trim incidence and trimmed stabilizer coefficients CD, Cm, and the hinge-moment coefficient; wing-body-tail CD and CL with stabilizer at trim deflection angle. Additional Digital Datcom symbols used in output are as follows:

- HM - Stabilizer hinge-moment coefficient based on the product of reference area and longitudinal reference length. Positive hinge moment will tend to rotate the stabilizer leading edge up and trailing edge down.
- ALIHT - Stabilizer incidence required to trim expressed in degrees. Positive incidence, or deflection, is trailing edge down.

The all-movable horizontal stabilizer trim output is presented as a function of angle of attack

6.1.7 Control at Hypersonic Speeds

Two types of control analyses are available at hypersonic speeds. They are transverse-jet control and flap effectiveness.

Data output from the hypersonic flap methods are incremental normal- and axial-force coefficients, associated hinge moments, and center-of-pressure location. These data are found from the local pressure distributions on the flap and in regions forward of the flap, The analysis includes the effects of flow separation due to windward flap deflection. This is done by providing estimates for separation induced pressures forward of the flap and reattachment on the flap. The users may specify laminar or turbulent boundary layers.

The transverse control jet method requires a user-specified time history of local flow parameters and control force required to trim or maneuver. With these data, the minimum jet plenum pressure necessary to induce separation is calculated. This minimum jet plenum pressure is then employed to calculate the nozzle throat diameter and the jet plenum pressure and propellant weight requirements to trim or maneuver the vehicle. Typical output can be seen in example problem 10.

6.1.8 Auxiliary and Partial Output

Auxiliary outputs consist of drag breakdown data, and basic configuration geometric properties. Partial outputs consist of component and vortex interference factors, effect of geometric parameters (e.g., dihedral and wing twist) on static and dynamic characteristics, canard effective-downwash data for transonic fairings and intermediate data that require user supplied data to complete. Typical output is shown in Figure 2b.

6.1.9 Effective Downwash

Datcom methods for configurations where the forward lifting-surface span is less

than 1.5 times the aft lifting-surface span do not explicitly provide estimates for either the downwash angle or gradient. However., Digital Datcom provides “effective-values” for those quantities. The canard effective downwash angle and gradient are defined as downwash data required to produce the correct wing-body-tail lift characteristics when applied to conventional configuration equations. The effective downwash gradient, $d\epsilon/d\alpha$, to found by equating the right hand sides of Datcom equations 4.5.1.1-a and 4.5-1.1-b. The effective downwash angle, ϵ, is found by equating the right hand sides of Datcom equations 4.5.1.2-a and 4.5.1.2-b.

AUTOMATED STABILITY AND CONTROL METHODS PER APRIL 1976 VERSION OF DATCOM
CONFIGURATION AUXILIARY AND PARTIAL OUTPUT
WING-BODY-VERTICAL TAIL-HORIZONTAL TAIL CONFIGURATION
CONFIGURATION BUILDUP, EXAMPLE PROBLEM 3, CASE 1

FLIGHT CONDITIONS					REFERENCE DIMENSIONS				
MACH NUMBER	ALTITUDE FT	VELOCITY FT/SEC	PRESSURE LB/FT**2	TEMPERATURE DEG R	REYNOLDS NUMBER 1/FT	REF. AREA FT**2	REFERENCE LENGTH LONG. FT	LAT. FT	MOMENT REF. CENTE HORIZ FT	VERT FT
.800					6.4000E+06	2.250	.822	3.000	2.600	0.000

BASIC BODY PROPERTIES

WETTED AREA	XCG	ZCG	BASE AREA	ZERO LIFT DRAG	BASE DRAG	FRICTION DRAG	PRESSURE DRAG
.3035E+01	2.60	0.00	.0398	.7579E-02	.1689E-02	.5491E-02	.3993E-03

XCG RELATIVE TO THEORETICAL LEADING EDGE MAC= .20

BASIC PLANFORM PROPERTIES

	AREA	TAPER RATIO	ASPECT RATIO	QUARTER CHORD SWEEP	MAC	QUARTER CHORD X(MAC)	Y(MAC)	ZERO LIFT DRAG	FRICTIO COEFFICIE
WING									
TOTAL THEORITICAL	.2259E+01	.298	.3984E+01	45.000	.826E+00	.260E+01	.615E+00		
TOTAL EXPOSED	.1796E+01	.331	.3707E+01	45.000	.755E+00	.274E+01	.747E+00	.577E-02	.337E-
HORIZONTAL TAIL									
TOTAL THEORITICAL	.4509E+00	.602	.3982E+01	45.000	.343E+00	.434E+01	.307E+00		
TOTAL EXPOSED	.3305E+00	.661	.3472E+01	45.000	.322E+00	.443E+01	.392E+00	.124E-02	.394E-
VERTICAL TAIL									
TOTAL THEORITICAL	.1223E+01	.412	.2358E+01	28.100	.762E+00	.379E+01	.366E+00		
TOTAL EXPOSED	.8097E+00	.485	.1961E+01	28.100	.668E+00	.386E+01	.498E+00	NA	NA

*** NA PRINTED WHEN METHOD NOT APPLICABLE

AUTOMATED STABILITY AND CONTROL METHODS PER APRIL 1976 VERSION OF DATCOM
CONFIGURATION AUXILIARY AND PARTIAL OUTPUT
WING-BODY-VERTICAL TAIL-HORIZONTAL TAIL CONFIGURATION
CONFIGURATION BUILDUP, EXAMPLE PROBLEM 3, CASE 1

FLIGHT CONDITIONS					REFERENCE DIMENSIONS				
MACH NUMBER	ALTITUDE FT	VELOCITY FT/SEC	PRESSURE LB/FT**2	TEMPERATURE DEG R	REYNOLDS NUMBER 1/FT	REF. AREA FT**2	REFERENCE LENGTH LONG. FT	LAT. FT	MOMENT REF. CENTE HORIZ FT	VERT FT
					6.4000E+06	2.250	.822	3.000	2.600	0.000

CLA-B(W)= 7.443E-03 CLA-W(B)= 5.578E-02 K-B(W)= 1.484E-01 K-W(B)= 1.112E+00 XAC/C-B(W)= 6.828E-01
CLA-B(H)= 1.777E-03 CLA-H(B)= 1.039E-02 K-B(H)= 1.986E-01 K-H(B)= 1.184E+00 XAC/C-B(H)= 3.035E-01

AUTOMATED STABILITY AND CONTROL METHODS PER APRIL 1976 VERSION OF DATCOM
CONFIGURATION AUXILIARY AND PARTIAL OUTPUT
WING-BODY-VERTICAL TAIL-HORIZONTAL TAIL CONFIGURATION
CONFIGURATION BUILDUP, EXAMPLE PROBLEM 3, CASE 1

FLIGHT CONDITIONS					REFERENCE DIMENSIONS				
MACH NUMBER	ALTITUDE FT	VELOCITY FT/SEC	PRESSURE LB/FT**2	TEMPERATURE DEG R	REYNOLDS NUMBER 1/FT	REF. AREA FT**2	REFERENCE LENGTH LONG. FT	LAT. FT	MOMENT REF. CENTER HORIZ FT	VERT FT
.800					6.4000E+06	2.250	.822	3.000	2.600	0.000

*** WING DATA FAIRING ***

CDL/CL**2 = .1977E+00 CLB/CL = -.4598E-02
FORCE BREAK MACH NUMBER (ZERO SWEEP) = .9321E+00 FORCE BREAK MACH NUMBER (WITH SWEEP) = .9332E+00
MACH(A) = 1.025 CLA(A) = .5384E-01 MACH(B) = 1.095 CLA(B) = .4967E-01
(CLB/CL)M=0.6 = -.4771E-02 (CLB/CL)M=1.4 = -.2642E-02

LIFT-CURVE-SLOPE INTERPOLATION TABLE

MACH	CL-ALPHA
.750	.4868E-01
.955	.5710E-01
1.025	.5384E-01
1.095	.4967E-01
1.400	.4200E-01

*** WING-BODY DATA FAIRING ***

CLB/CL = -.7236E-02 (CLB/CL)MFB = -.4718E-02 (CLB/CL)M=1.4 = -.2033E-02 (CNA)M=1.4 = .9553E-01

*** HORIZONTAL TAIL DATA FAIRING ***

CDL/CL**2 = .2357E+00 CLB/CL = -.2345E-02
FORCE BREAK MACH NUMBER (ZERO SWEEP) = .9738E+00 FORCE BREAK MACH NUMBER (WITH SWEEP) = .9838E+00
MACH(A) = 1.054 CLA(A) = .1327E-01 MACH(B) = 1.124 CLA(B) = .1218E-01
(CLB/CL)M=0.6 = -.2620E-02 (CLB/CL)M=1.4 = -.2496E-03

LIFT-CURVE-SLOPE INTERPOLATION TABLE

MACH	CL-ALPHA
.750	.8234E-02
.984	.1401E-01
1.054	.1327E-01
1.124	.1218E-01
1.400	.7109E-02

*** HORIZONTAL TAIL-BODY DATA FAIRING ***

CLB/CL = -.1275E-02 (CLB/CL)MFB = -.9533E-03 (CLB/CL)M=1.4 = -.1559E-03 (CNA)M=1.4 = .1197E-01

*** BODY-WING-HORIZONTAL TAIL DATA FAIRING ***
DRAG DIVERGENCE MACH NUMBER = .931

MACH	CDO
.600	.1712E-01
.700	.1710E-01
1.100	.2432E-01
1.400	.2413E-01

FIGURE 26 EXAMPLE AUXILIARY AND PARTIAL OUTPUT

6.2 DIGITAL DATCOM SYSTEM OUTPUT

Execution of Digital Datcom will produce a series of messages and data in addition to the results previously discussed. This information falls into three categories: input diagnostics and error analysis, extrapolation warning messages, and Airfoil Section Module output. In addition to those outputs, an optional listing of the case input namelist data is available by using the NAMELIST control card (see Section 3.5).

Additional output may be obtained by using the DUMP and PART control cards. When the DUMP option is exercised, the contents of user specified data blocks are output prior to the conventional aerodynamic characteristics output. A list of the arrays and variables stored ft each data block is presented in Appendix C.

6.2.1 Input Error Analysis

An input diagnostic module (CONERR) checks all data in the input stream prior to execution of any other Digital Datcom module. This module checks all namelist and control cards and flags any errors. CONERR headings and error messages are designed to be self explanatory. All input cards are listed and any cards containing errors have the appropriate message written immediately to the right of the card. An explanation of the seven messages that can be generated by CONERR are given in Table V . CONERR will not correct any errors and the program will attempt to execute each case using the data as input by the user.

Prior to case execution, additional input error analysis its conducted to insure that all namelists essential to the case are present. This analysis will abort only those cases missing an essential namelist. The messages that can be produced by this analysis are given in Table 15.

6.2.2 Extrapolation Messages

Extrapolation messages are produced when the independent variable range of the Datcom figures (nomographs/design charts) have been exceeded. Those messages identify the number of the figure involved, the independent variable values currently being used, the resultant value of the dependent variable, the type of extrapolation that was used to generate the dependent variables and the name of the table lookup routine and the subroutines that contains the figure. They are printed primarily to alert users when the normal limit of Datcom figures has been exceeded so that the user can determine the credibility of the results. The messages are listed at the end of the ease output. Extrapolation message interpretation is illustrated in Figure 27. The extrapolation messages are written to a computer system “scratch tape” as they are generated. At the conclusion of the case they are read and sorted by figure number within each program overlay. In this way all, extrapolations for a single figure produced in a method nodule are output together for convenience. Note that these extrapolation messages are not necessarily output

in their order of occurrence in the program.

TABLE 14 - CONERR ERROR MESSAGES

ERROR MESSAGE	EXPLANATION
** ERROR ** UNKNOWN NAMELIST NAME	NAMELIST NAME NOT RECOGNIZED.
** MISSING NAMELIST TERMINATION ADDED	NAMELIST TERMINATION NOT FOUND.
** ERROR NO NAMELIST NAME FOLLOWING $	FIRST NAMELIST CARD DOES NOT CONTAIN A NAMELIST NAME.
** ERROR ** N*A N*B N*C N*D N*E N*F	ERROR FOUND ON THE CARD, N* DENOTES THE NUMBER OF OCCURRENCES OF EACH ERROR A - UNKNOWN VARIABLE NAME B - MISSING EQUAL SIGN FOLLOWING VARIABLE NAME C - NON-ARRAY VARIABLE HAS AN ARRAY DESIGNATION, (N) D - NON-ARRAY HAS MULTIPLE VALUES ASSIGNED E - ASSIGNED VALUES EXCEED ARRAY DIMENSION F - SYNTAX ERROR
** ILLEGAL CONTROL CARD	CONTROL CARD NOT RECOGNIZED.
** ERROR ** N INCORRECT ARRAY NAMES	ON A DUMP CARD, "N" ARRAY NAMES WERE INCORRECT
** ERROR 11** INCORRECT LIFTING SURFACE DESIGNATION ON NACA CARD	COLUMN 6 OF THE NACA CARD DOES NOT CONTAIN W, H, V OR F.

TABLE 15 - CASE ERROR MESSAGES

MESSAGE	EXPLANATION
ERROR ** FLAP INBOARD EDGE SPANI = XXX, IS INSIDE THE BODY AS DEFINED BY SSPN AND SSPNE. SPANI IS REDEFINED, SPANI=SSPN-SSPNE=XXX.	THE FLAP INBOARD FLAP STATION, bi/2, DEFINED IN NAMELIST SYMFLP OR ASYFLP LIES INSIDE THE BODY AS DEFINED BY THE TOTAL SPAN AND EXPOSED SPAN, b/2 AND b*/2, IN THE PLANFORM NAMELIST.
ERROR-FLIGHT CONDITIONS NOT PRESENT-MISSING NAME *FLTCON*	NAMELIST "FLTCON" NOT INPUT
ERROR-SYNTHESIS DATA MISSING-MISSING NAME *SYNTHS*	NAMELIST "SYNTHS" NOT INPUT
ERROR-WING PLANFORM PRESENT BUT SECTION CHARACTERISTICS ABSENT-MISSING NAME *WGSCHR*	NAMELIST "WGSCHR" OR "NACA-W" CONTROL CARD NOT INPUT
ERROR-WING SECTION CHARACTERISTICS PRESENT BUT PLANFORM ABSENT-MISSING NAME *WGPLNF*	NAMELIST "WGPLNF" NOT INPUT
ERROR-HORIZONTAL TAIL PLANFORM PRESENT BUT SECTION CHARACTERISTICS ABSENT-MISSING NAME *HTSCHR*	NAMELIST "HTSCHR" OR "NACA - H" CONTROL CARD NOT INPUT
ERROR-HORIZONTAL TAIL SECTION CHARACTERISTICS PRESENT BUT PLANFORM ABSENT-MISSING NAME *HTPLNF*	NAMELIST "HTPLNF" NOT INPUT
ERROR-VERTICAL TAIL PLANFORM PRESENT BUT SECTION CHARACTERISTICS ABSENT-MISSING NAME *VTSCHR*	NAMELIST "VTSCHR" OR "NACA - V" CONTROL CARD NOT INPUT
ERROR-VERTICAL TAIL SECTION CHARACTERISTICS PRESENT BUT PLANFORM ABSENT - MISSING NAME *VTPLNF*	NAMELIST "VTPLNF" NOT INPUT
ERROR-VENTRAL FIN PLANFORM PRESENT BUT SECTION CHARACTERISTICS ABSENT-MISSING NAME *VFSCHR*	NAMELIST "VFSCHR" OR "NACA-F" CONTROL CARD NOT INPUT
ERROR-VENTRAL FIN SECTION CHARACTERISTICS PRESENT BUT PLANFORM ABSENT-MISSING NAME *VFPLNF*	NAMELIST "VFPLNF" NOT INPUT
THIS CASE ABORTED FOR THE ABOVE REASON(S), ALL NAMES REFER TO NAMELIST NAMES	THIS CASE WILL NOT BE EXECUTED, THE NEXT CASE WILL BE ATTEMPTED.

6.2.3 Airfoil Section Module

The Airfoil Section Module is executed whenever airfoil section characteristics are to be calculated. Output consists of section coordinates and a listing of the calculated section characteristics.

The following example is a hypothetical extrapolation warning message created to illustrate the Digital Datcom technique.

```
                                                    EXTRAPOLATION MESSAGE SUMMARY

OVERLAY   FIGURE NUMBER                          TYPE OF EXTRAPOLATION (LOWER UPPER)
           SUBROUTINES                               FIGURE LIMITS (LOWER UPPER)
                          FINAL RESULT                 INDEPENDENT VARIABLES

  23       5.1.2.1-27                    LAST VAL  QUADRTIC   LINEAR   QUADRTIC  LAST VAL  LAST VAL
           TLIN3X   SUPLAT               1.00E+00  8.00E+01 -2.00E+01  6.00E+01  0         1.00E+00
                          1.03813E-02      8.31203E+00 **     6.24200E+01 **     5.58603E-01
                                              X1                 X2                 X3
```

Datcom figure 5.1.2.1-27 is used to aid the extrapolation message interpretation.

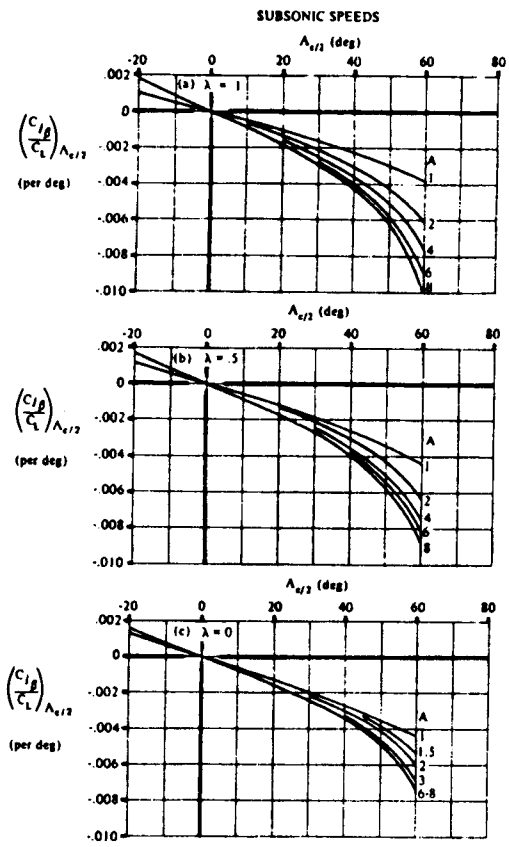

FIGURE 5.1.2.1-27 WING SWEEP CONTRIBUTION TO C_{l_β}

Step 1. Associate the Datcom figure variables with the Digital Datcom variables X1, X2, X3, by comparing lower and upper limit values with the limits shown on the Datcom figure. In this example:

X1 corresponds to A

X2 corresponds to $\Lambda_{c/2}$

X3 corresponds to λ

Step 2. From Step 1 determine the variable that relates the sub-figures (a), (b), and (c) (i.e. λ or X3). If this variable lies within the table limits, interpolation between two of the figures may be required. In this example X3 = .559. Thus interpolation is performed between figures (a) and (b).

Step 3. Extrapolate the variables according to the type of extrapolation given in the message. In this example figures (a) and (b) are extrapolated on variables X1(A) and X2($\Lambda_{c/2}$). Since the extrapolation technique is general, only figure (b) extrapolation will be demonstrated.

FIGURE 27 EXTRAPOLATION MESSAGE INTERPRETATION

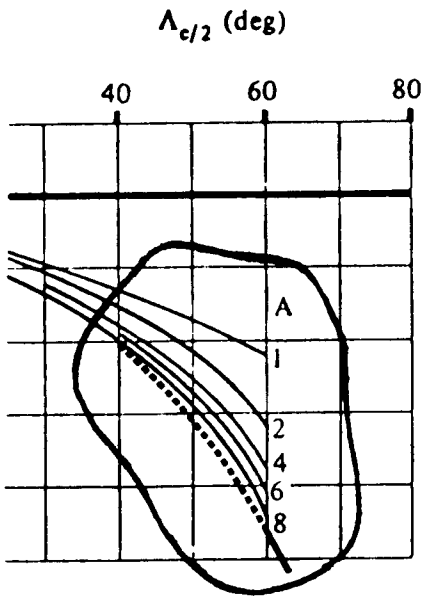

Cutout A shows a dashed curve added to figure (b) illustrating the quadratically extrapolated X1 variable to 8.31. Next, the dashed curve is extrapolated quadratically with a solid line to the X2 value of 62.4.

Step 4. Figure (a) is extrapolated as outlined above. The extrapolated values for figures (a) and (b) are then used to interpolate yielding the final result of -.0138.

CUTOUT A

This extrapolation information is written to logical unit 12 for processing by overlay 57. The format is as follows:

```
1  23  3  3
2  TLIN3X  SUPLAT  5.1.2.1-27
3    .83120E+01   .10000E+01   .80000E+01  0  2
4    .62420E+02   .20000E+02   .60000E+02  1  2
5    .55860E+00  0.            .10000E+01  0  0
6    .10381E-01
7  999999999
```

Line 1: Overlay number, number of four character words for figure number and number independent variables.

Line 2: Subroutines and figure number

Lines 3-5: Extrapolation data for each independent variable:
Independent variable; lower limit; upper limit; type of extrapolation, lower and upper, where
- -1 = not required
- 0 = use last value
- 1 = linear
- 2 = quadratic

Line 6: Final result

Line 7: End of extrapolation messages mark (written from overlay 57 prior to dump of extrapolation messages). Used to signify end of extrapolation messages for the case.

FIGURE 27 EXTRAPOLATION MESSAGE INTERPRETATION (CONCLUSION)

SECTION 7

EXAMPLE PROBLEMS

Eleven sample problems have been selected to illustrate the modeling techniques described in Section 4 as well as the use of the input namelist and control cards. The paragraphs below describe each of the example problems selected for illustrating the program setup of the configurations described in Sections 4 and 5. The input data for each example problem is presented. [*The complete input and output for each case will be found on the CD-ROM*]

7.1 EXAMPLE PROBLEM 1

Figure 28 shows three body configurations along with selected X coordinates where shape parameters would be specified. Notice the concentration of points used to define curvature and abrupt changes in body contours. Configuration (c) is chosen as the Problem 1 example to illustrate the body alone analysis at all speed regimes.
Subsonic body analyses are obtained for an approximate axisymmetric body and for a cambered body.

A summary of the four cases in problem 1 is given below:

Case No.	Configuration	Mach No.	Comments
1	Body	0.6	Axisymetric solution
2	Body	0.6	Cambered solution
3	Body	0.9.1.40,2.5	Supersonic analysis at Mach No. 1.4 and 2.5
4	Body	2.5	Hypersonic analysis

This problem illustrates the use of the CASEID, DUMP CASE, SAVE, and NEXT CASE control cards.

```
 $FLTCON NMACH = 1.0, MACH(1)=0.60,
         NALPHA = 11.0,
         ALSCHD(1) = -6.0, -4.0, -2.0, 0.0, 2.0, 4.0, 8.0, 12.0, 16.0, 20.0,
         RNNUB=4.28E6$
 $OPTINS SREF=8.85, CBARR=2.48, BLREF=4.28$
 $SYNTHS XCG=4.14, ZCG=-0.20$
 $BODY NX = 10.0,
   X(1)=0.0,0.258,0.589,1.26,2.26,2.59,2.93,3.59,4.57,6.26,
   R(1)=0.0,0.106,0.206,0.424,0.533,0.533,0.533,0.533,0.533,0.533,
   S(1)=0.0,0.080,0.160,0.323,0.751,0.883,0.939,1.032,1.032,1.032,
   P(1)=0.0,1.00,1.42,2.01,3.08,3.64,3.44,3.61,3.61,3.61$
 $BODY BNOSE=1.0, BLN=2.59, BLA=3.67$
CASEID APPROXIMATE AXISYMMETRIC BODY SOLUTION, EXAMPLE PROBLEM 1,  CASE 1
SAVE
DUMP CASE
NEXT CASE
 $BODY ZU(1)= -.595,-.476,-.372,-.138, .200,.334,.343,.343,.343,.343,
       ZL(1)= -.595, -.715, -.754, -.805, -.868, -.868, -.868, -.868, -.868$
CASEID ASYMMETRIC (CAMBERED) BODY SOLUTION, EXAMPLE PROBLEM 1, CASE 2
SAVE
NEXT CASE
 $FLTCON NMACH=3.0, MACH(1)=0.9,1.4,2.5, RNNUB=6.4E6, 9.96E6, 17.0E6$
SAVE
NEXT CASE
CASEID ASYMMETRIC (CAMBERED) BODY SOLUTION, EXAMPLE PROBLEM 1, CASE 3
NEXT CASE
 $FLTCON NMACH=1.0, MACH(1)=2.5, RNNUB=17.86E6, HYPERS=.TRUE.$
 $BODY DS=0.0$
CASEID HYPERSONIC BODY SOLUTION,  EXAMPLE PROBLEM 1, CASE 4
NEXT CASE
```

Input file ex1.inp

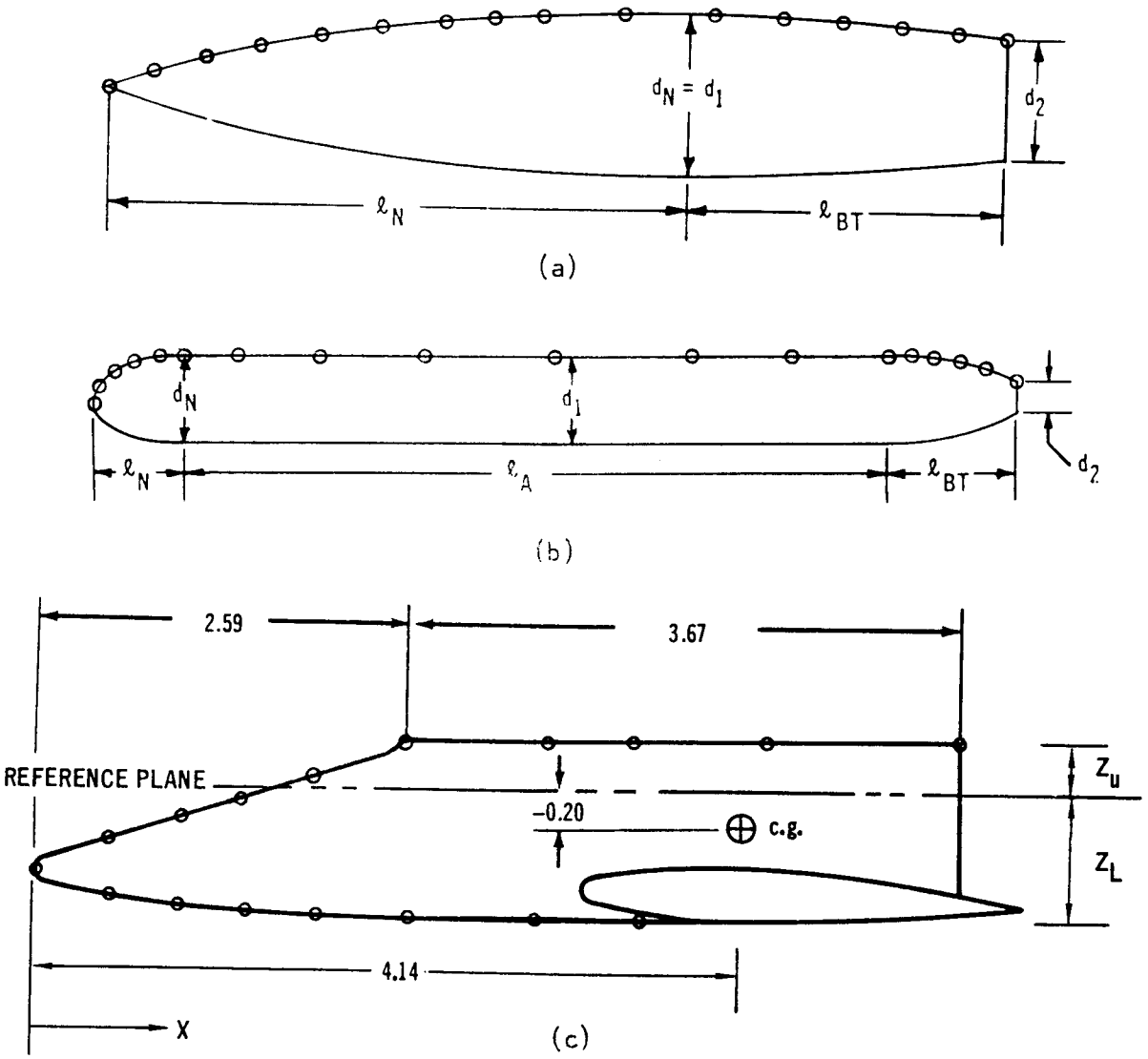

BODY INFORMATION (CONFIGURATION C)

X (FT)	S(FT^2)	P(FT)	R(FT)	Zu (FT)	Z_L (FT)
0.0	0.0	0.0	0.0	-0.595	-0.595
0.258	0.080	1.00	0.186	-0.476	-0.715
0.589	0.160	1.42	0.286	-0.372	-0.754
1.26	0.323	2.01	0.424	-0.138	-0.805
2.26	0.751	3.08	0.533	+0.200	-0.868
2.59	0.883	3.34	0.533	0.334	-0.868
2.93	0.939	3.44	0.533	0.343	-0.868
3.59	1.032	3.61	0.533	0.343	-0.868
4.57	1.032	3.61	0.533	0.343	-0.868
6.26	1.032	3.61	0.533	0.343	-0.868

FIGURE 28 BODY MODELING AND EXAMPLE PROBLEM 1 BODY DATA

7.2 EXAMPLE PROBLEM 2

Wing alone models for straight-tapered and non-straight-tapered planforms are shown in Figure 29. The root and tip airfoil sections differ as shown in Figure 30; therefore average values of section data are used where appropriate. Calculation and determination of section input characteristics are from the procedure and figures of Appendix B. These input variables are also summarized in Figure 30. The configuration analysis consists of:

Case No.	Configuration	Mach No.	Comments
1	Exposed wing	0.6,0.9,1.40 2.5	Straight-tapered-wing dump A array
2	Exposed wing	0.6	Cranked wing
3	Exposed wing	0.6	Double delta

This problem also illustrates the control of program looping using the variable LOOP in namelist FLTCON to obtain the flight conditions. Note that cases 2 and 3 use the same inputs to FLTCON, but LOOP is changed from 2 to 3.

```
 $FLTCON  NMACH=4.0, MACH=0.6,0.9,1.4,2.5, LOOP=1.0, NALT=4.0,
   ALT=0.0, 2000.0, 40000.0, 90000.0, HYPERS=.FALSE.,
   NALPHA=11.0, ALSCHD=-6.0, -4.0, -2.0, 0.0, 2.0, 4.0,
   8.0, 12.0, 16.0, 20.0, 24.0$
 $OPTINS SREF=8.05, CBARR=2.46, BLREF=4.28$
 $SYNTHS XW=3.61, ZW=-.98, ALIW=2.0,XCG=4.14$
 $WGPLNF CHRDTP=0.64, SSPNE=1.59, SSPN=1.59,CHRDR=2.90, SAVSI=55.0,
CHSTAT=0.0,
    SWAFP=0.0, TWISTA=0.0, SSPNDD=0.0, DHDADI=0.0, DHDADO=0.0,
TYPE=1.0$
 $WGSCHR DELTAY=2.05, XOVC=0.4, CLI=0.127, ALPHAI=0.123,
CLALPA=0.1335,
    TOVC=0.11,
    CLMAX(1)=1.195, CMO=-0.0262, LERI=0.0134, CAMBER=.TRUE.,
CLAMO=0.105,
    TCEFF=0.055$
CASEID STRAIGHT TAPERED EXPOSED WING SOLUTION, EXAMPLE PROBLEM 2, CASE
1
SAVE
DUMP A
NEXT CASE
 $FLTCON NMACH=2.0,MACH=0.6,2.5, LOOP=2.0, NALT=2.0, ALT=0.0, 90000.0$
 $SYNTHS XW=2.497, ZW=0.710$
 $WGPLNF SSPNOP=1.11, CHRDBP=2.24, CHRDR=4.01,
   SAVSI=75.1, SAVSO=55.0, TYPE=3.0$
 $WGSCHR  TOVC=0.1, LERI=0.011, LERO=0.0138, TOVCO=0.12,
   XOVCO=0.40, CMOT=-0.0262$
CASEID EXPOSED CRANKED WING SOLUTION, EXAMPLE PROBLEM 2, CASE 2
SAVE
NEXT CASE
 $FLTCON LOOP=3.0$
 $WGPLNF TYPE=2.0$
CASEID EXPOSED DOUBLE DELTA WING SOLUTION, EXAMPLE PROBLEM 2, CASE 3
NEXT CASE
```

Input file ex2.inp

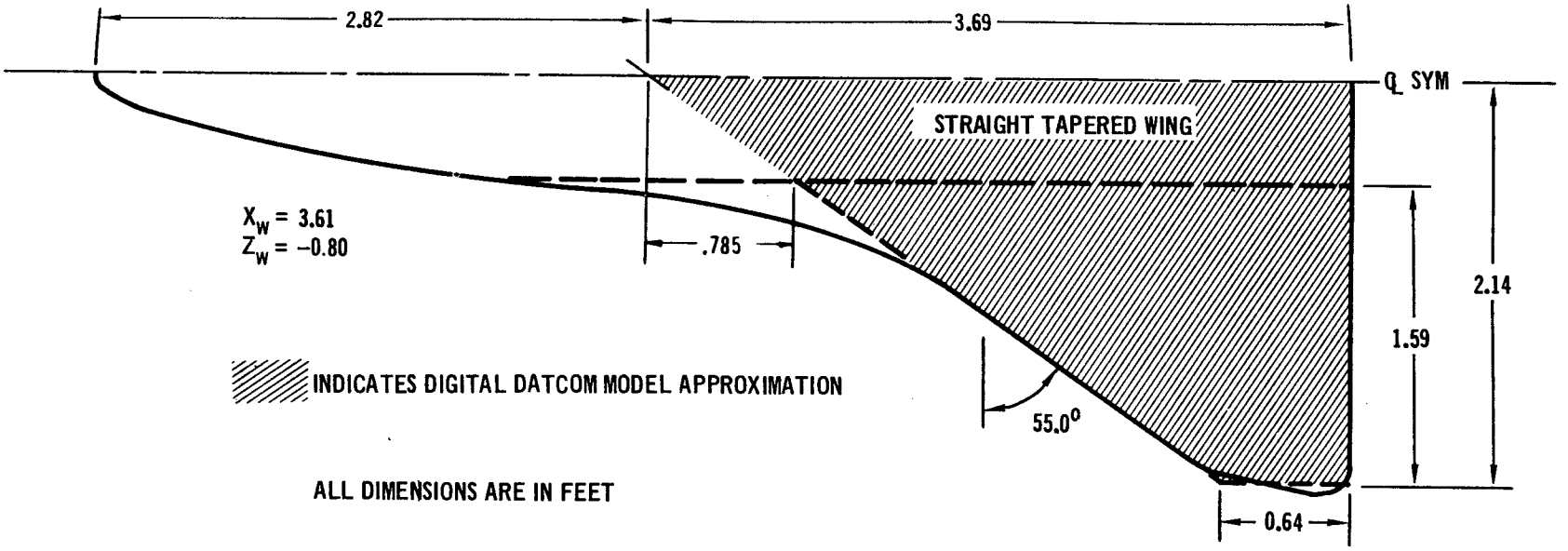

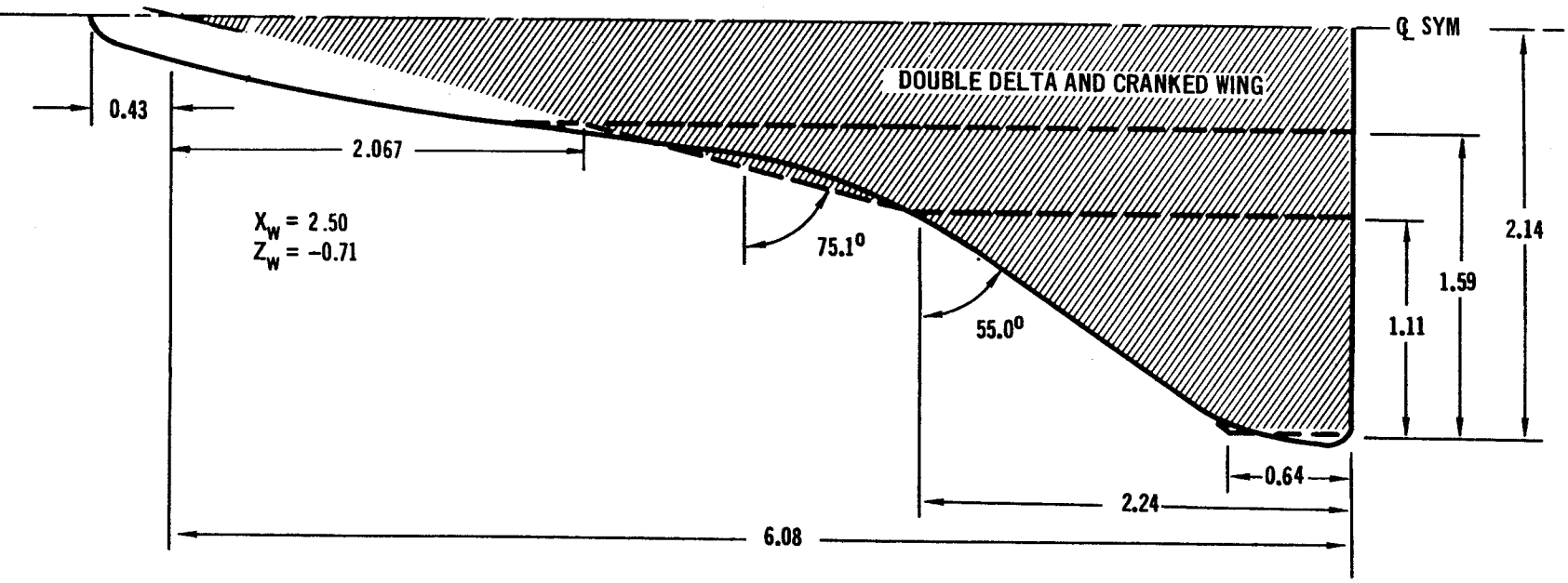

FIGURE 29 EXAMPLE PROBLEM 2 WING PLANFORM APPROXIMATIONS

REFER TO INPUT NAMELIST WGSCHR FIGURE 8

ROOT AIRFOIL= NACA 1410–64 TIP AIRFOIL = NACA 1412–64

ENGINEERING SYMBOL	VARIABLE NAME	VALUE OF VARIABLE		COMMENTS
		CRANKED OR DOUBLE DELTA	STRAIGHT TAPERED	
t/c	TØVC	0.10	0.11 ⚠	SEE APPENDIX B
$(t/c)_0$	TØVCØ	0.12	NA	
$(x/c)_{t\ MAX}$	XØVC	0.40	0.40 ⚠	
$(x/c)_{t\ MAX_0}$	XØVCØ	0.40	NA	
R_{LE}	LERI	0.011	0.0134 ⚠	
$(R_{LE})_0$	LERO	0.0158	NA	
ΔY	DELTAY	2.85	2.85	
c_{ℓ_α}	CLALPA	0.1335	.1335	
$c_{\ell_{MAX}}$	CLMAX	1.195	1.195	
c_{ℓ_i}	CLI	0.127	0.127	
α_i	ALPHAI	0.123	0.123	
c_{m_0}	CMO	–0.0262	–0 0262	
$(c_{m_0})_0$	CMOT	–0 0262	NA	
CAMBER	CAMBER	CAMBER = TRUE	CAMBER = TRUE	
$(c_{\ell_\alpha})_{M=0}$	CLAMO	0.105	0.105	
$(t/c)_{EFF}$	TCEFF	0.055	0.055	

⚠ STRAIGHT TAPERED VALUES EQUAL AVERAGE OF CRANKED OR DOUBLE DELTA VALUES

FIGURE 30 AIRFOIL CHARACTERISTIC VARIABLES, EXAMPLE PROBLEM 2

7.3 EXAMPLE PROBLEM 3

Pertinent data for Example Problem 3 are presented in Figure 31. The problem consists of a wing-body-horizontal tail-vertical-tail configuration analyzed at subsonic and transonic Mach numbers. Results are obtained for various combinations of the vehicle components by using the BUILD option. The second case utilizes experimental body and wing-body data to update subsequent Digital Datcom configuration analyses. The remaining cases lllustrate the use of the twin vertical panel, propeller power and jet power inputs. A summary of the various configurations analyzed is presented below.

Case No.	Configuration
1	Wing + body + vertical-tail + horizontal-tail configuration buildup
2	Wing + body + vertical-tail + horizontal-tail with body and wing-body experimental data
3	Wing + body + vertical-tail + horizontal-tail + twin-vertical-panels with body and wing-body experimental data
4	Wing + body + vertical-tail + horizontal-tail + twin-vertical-panels + propellor power with body and wing-body experimental data
5	Wing + body + vertical-tail + horizontal-tail + twin-vertical-panels + jet power with body and wing-body experimental data

```
BUILD
 $FLTCON  NMACH=2.0, MACH(1)=0.6,0.8,
  NALPHA=9.0, ALSCHD(1)=-2.0,0.0,2.0,4.0,8.0,12.0,16.0,20.0,24.0,
  RNNUB(1)=2.28E6,3.04E6$
 $FLTCON NMACH=3.0, MACH(1)=0.6,0.8,1.5,
  RNNUB(1)=4.26E6, 6.4E6,9.96E6$
 $OPTINS SREF=2.25, CBARR=0.822, BLREF=3.00$
 $SYNTHS XCG=2.60, ZCG=0.0, XW=1.70, ZW=0.0, ALIW=0.0, XH=3.93,
   ZH=0.0, ALIH=0.0, XV=3.34, VERTUP=.TRUE.$
 $BODY NX=10.0,BNOSE=2.0,BTAIL=1.0,BLN=1.46,BLA=1.97,
   X(1)=0.0, .175,.322,.530,.850,1.46,2.5,3.43,3.97,4.57,
   S(1)=0.0,.00547,.022,.0491,.0872,.136,.136,.136,.0993,.0698,
   P(1)=0.0,.262,.523,.785,1.04,1.305,1.305,1.305,1.12,.866,
   R(1)=0.0, .0417,.0833,.125,.1665,.208,.208,.208,.178,.138$
 $WGPLNF CHRDTP=0.346, SSPNE=1.29, SSPN=1.5, CHRDR=1.16, SAVSI=45.0,
    CHSTAT=0.25, SWAFP=0.0, TWISTA=0.0, SSPNDD=0.0,
    DHDADI=0.0, DHDADO=0.0, TYPE=1.0$
 $WGSCHR TOVC=0.06, DELTAY=1.3, XOVC=0.4, CLI=0.0, ALPHAI=0.0,
    CLALPA(1)=0.131, CLMAX(1)=.82, CMO=0.0, LERI=.0025, CLAMO=.105$
 $VTPLNF CHRDTP=.42, SSPNE=.63, SSPN=0.849, CHRDR=1.02, SAVSI=28.1,
    CHSTAT=.25, SWAFP=0.0, TWISTA=0.0, TYPE=1.0$
 $VTSCHR TOVC=0.09, XOVC=0.4, CLALPA(1)=0.141, LERI=0.0075$
 $WGSCHR CLMAXL=0.78$
 $HTPLNF CHRDTP=0.253, SSPNE=0.52, SSPN=0.67, CHRDR=0.42, SAVSI=45.0,
   CHSTAT=0.25, SWAFP=0.0, TWISTA=0.0, SSPNDD=0.0, DHDADI=0.0, DHDADO=0.0,
   TYPE=1.0$
 $HTSCHR TOVC=0.06, DELTAY=1.3, XOVC=0.4, CLI=0.0, ALPHAI=0.0,
  CLALPA(1)=.131, CLMAX(1)=0.82, CMO=0.0, LERI=.0025, CLAMO=.105$
CASEID CONFIGURATION BUILDUP, EX. PROBLEM 3, CASE 1
SAVE
NEXT CASE
 $EXPR01 CLAWB(1)=0.0575, CMAWB(1)=-0.0050,
  CDWB(1)=.015,.014,.015,.019,.064,.141,.216,.302,.410,
  CLWB(1)=-.115,0.0,.115,.23,.47,.65,.76,.81,.90,
  CMWB(1)=.010,0.0,-.010,-.020,-.038,-.002,-.013,-.013,-.020,
  CLAB(1)=.002, CMAB(1)=.0039,
  CDB(1)=.012,.010,.012,.013,.014,.016,.020,.030,.047,
  CLB(1)=-.004,0.0,.004,.008,.012,.020,.060,.085,.1,
  CMB(1)=-.0078,.0078,.020,.038,.060,.083,.110,.140,.165$
 $EXPR02 CLAWB(1)=.06,CLAB(1)=.002,CMAB(1)=.0039,
  ALPOW=0.0, ALPLW=8.0,ACLMW=12.01, CLMW=1.39,
  ALPOW=0.0, ALPLW=6.2,ACLMW=10.10, CLMH=1.02$
CASEID INCL. BODY AND WING-BODY EXPERIMENTAL DATA, EX. PROB. 3,CASE 2
SAVE
NEXT CASE
 $TVTPAN BVP=0.4, BV=0.6, BDV=0.36, BH=1.10,
  SV=0.360, VPHITE=20.0, VLP=1.04, ZP=0.0$
CASEID INCL. BODY AND WING-BODY EXPERIMENTAL DATA, EX. PROB.3, CASE 3
SAVE
NEXT CASE
 $FLTCON NMACH=1.0, MACH(1)=0.6, RNNUB(1)=2.28E6$
 $PROPWR AIETLP=2.0,NENGSP=1.0,THSTCP=0.15,
  PHALOC=0.0, PHVLOC=0.0, PRPRAD=0.4,
  ENGFCT=70.0, NOPBPE=4.0,BAPR75=18.0, YP=0.0, CROT=.FALSE.$
CASEID INCL. BODY AND WING-BODY EXPERIMENTAL DATA, EX. PROB.3, CASE 4
SAVE
NEXT CASE
 $FLTCON NMACH=1.0, MACH(1)=0.6, RNNUB(1)=2.28E6$
```

```
 $JETPWR AIETLJ=2.0, NENGSJ=1.0, THSTCJ=0.35, JIALOC=0.0,
  JEVLOC=0.0, JEALOC=0.5, JINLTA=3.0, JEANGL=15.0, JEVELO=4000.0,
  AMBTMP=500.0, JESTMP=2000.0, JELLOC=0.0,
  JETOTP=5000.0, AMBSTP=500.0, JERAD=2.0$
CASEID INCL. BODY AND WING-BODY EXPERIMENTAL DATA, EX. PROB. 3, CASE 5
NEXT CASE
```

Input file ex3.inp

FLIGHT CONDITIONS: MACH NUMBERS = 0.60, 0.80
REYNOLDS NUMBERS PER FT = 2.28×10^6, 3.04×10^6
SCHEDULED ANGLES OF ATTACK = −2.0, 0.0, 2.0, 4.0, 8.0, 12.0, 16.0, 20.0, 24.0

REFERENCE PARAMETERS: REFERENCE AREA = 2.25
LONG. REF. LENGTH = 0.822
LATERAL REF. LENGTH = 3.00

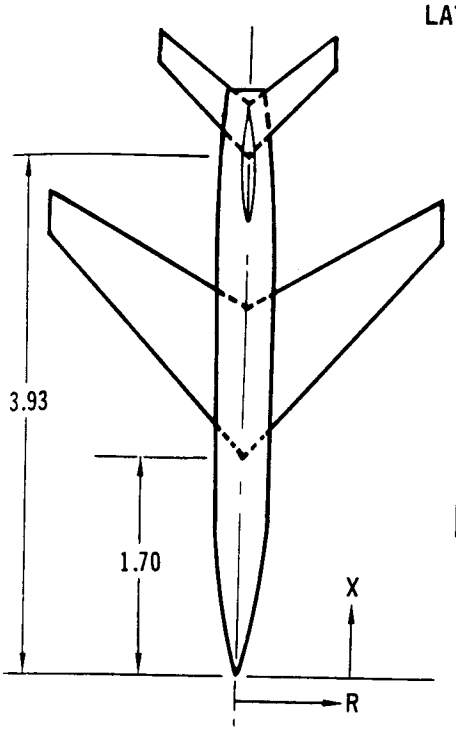

	WING	HORIZONTAL TAIL	VERTICAL TAIL
SEMISPAN	1.50	0.67	0.849
EXPOSED SEMISPAN	1.29	0.52	0.630
c_t	0.346	0.253	0.42
c_R	1.16	0.420	1.02
$\Lambda_{c/4}$	45^0	45^0	28.1
AIRFOIL	NACA 65A006	NACA 65A006	NACA 63A009

REFER TO INPUT DATA FOR BODY AND PROPELLER POWER DATA.

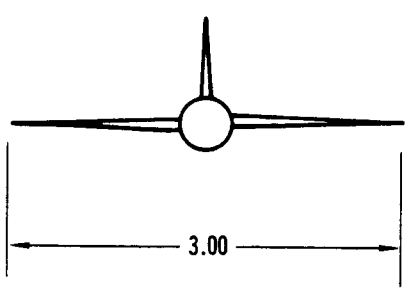

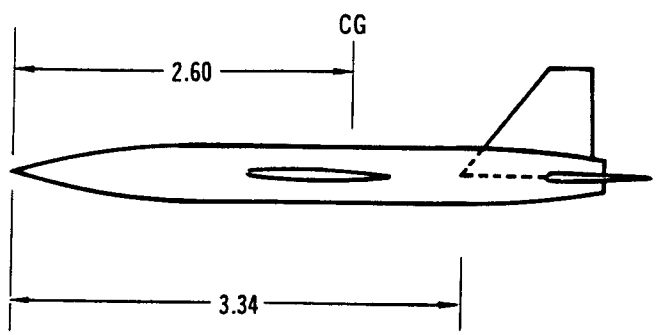

EXPERIMENTAL DATA

MACH = 0.60 $(C_{L_\alpha})_B = 0.002$, $(C_{m_\alpha})_B = 0.0039$,
$(C_{L_\alpha})_{WB} = 0.0575$, $(C_{m_\alpha})_{WB} = -0.005$

MACH = 0.80 $(C_{L_\alpha})_B = 0.002$, $(C_{m_\alpha})_B = 0.0039$,
$(C_{L_\alpha})_{WB} = 0.060$

ALPHA	$(C_D)_B$	$(C_L)_B$	$(C_m)_B$	$(C_D)_{WB}$	$(C_L)_{WB}$	$(C_m)_{WB}$	$(C_D)_B$
−2	0.012	−0.004	−0.0078	0.015	−0.115	0.010	0.012
0	0.010	0.0	0.0078	0.014	0.0	0.0	0.010
2	0.012	0.004	0.020	0.015	0.115	−0.010	0.012
4	0.013	0.008	0.038	0.019	0.23	−0.020	0.013
8	0.014	0.012	0.060	0.064	0.47	−0.038	0.014
12	0.016	0.020	0.083	0.141	0.65	−0.002	0.016
16	0.020	0.060	0.110	0.216	0.76	+0.013	0.020
20	0.030	0.085	0.140	0.302	0.81	−0.013	0.032
24	0.047	0.100	0.165	0.410	0.90	−0.020	0.050

FIGURE 31 EXAMPLE PROBLEM 3 DATA

7.4 EXAMPLE PROBLEM 4

Pertinent information for Example Problem 4 is presented in Figure 32. In this example, a wing-body-canard configuration is analyzed in the subsonic speed regime (Case 1). Canard and wing section data are calculated using the Airfoil Section Module (Appendix B). Case 2 illustrates the use of the supersonic airfoil option of the Airfoil Section Module, nonzero body nose ordinate, vehicle scale factor, and use of metric inputs. Note that since the NACA control cards are being used, RNNUB and MACH must be used to define the flight conditions.

```
 $FLTCON  NMACH=1.0, MACH(1)=0.6,
  NALPHA=5.0, ALSCHD(1)=0.0,5.0,10.0,15.0,20.0, RNNUB(1)=3.1E6$
 $OPTINS SREF=694.2, CBARR=18.07, BLREF=45.6$
 $SYNTHS XCG=36.68, ZCG=0.0$
 $BODY NX=19.0,BNOSE=2.0,BTAIL=1.0,BLN=1.46,BLA=1.97,
   X(1)=0.0,  2.01,  5.49,  8.975, 12.47,
      15.97, 19.47, 22.89, 26.49,  30.0,
      33.51, 37.02, 40.53, 44.03,  47.53,
      51.02, 54.52, 57.99, 60.0,
   S(1)=0.0, 2.89,   7.42, 11.32, 14.64,
      17.36, 19.49, 21.0,  21.91, 22.20,
      21.90, 21.0,  19.49, 17.36, 14.64,
      11.33, 7.42, 2.89, 0.0,
   P(1)=0.0,  1.84,  4.72,  7.21,  9.32,
      11.01, 12.41, 13.36, 13.94, 14.14,
      13.94, 13.36, 12.41, 11.05,  9.32,
       7.21,  4.72,  1.84 , 0.0,
   R(1)=0.0, 0.293, 0.752,  1.15, 1.48,
       1.76,  1.97,  2.13,  2.22, 2.25,
       2.22,  2.13,  1.97,  1.76, 1.48,
       1.15,  0.752, 0.293, 0.0$
NACA-W-6-65A004
NACA-H-6-65A004
 $WGPLNF CHSTAT=0.0,
      SWAFP=0.0,TWISTA=0.0,SSPNDD=0.0,DHDADI=0.0,DHDADO=0.0,TYPE=1.0$
 $SYNTHS XW=8.064,ZW=0.0,ALIW=0.0$
 $WGPLNF CHRDTP=0.0,SSPNE=6.205,SSPN=8.01,CHRDR=13.87,SAVSI=60.0$
 $SYNTHS XH=29.42,ZH=0.0,ALIH=0.0$
 $HTPLNF SSPNE=21.34,SSPN=22.82,CHRDR=26.62,SAVSI=38.52,CHSTAT=0.0,
         CHRDTP=3.80,
    SWAFP=0.0,TWISTA=0.0,SSPNDD=0.0,DHDADI=0.0,DHDADO=0.0,TYPE=1.0,
    SHB(1)=73.5,
    SEXT(1)=73.5,RLPH(1)=47.3$
CASEID BODY PLUS WING PLUS CANARD, EXAMPLE PROBLEM 4, CASE 1
NEXT CASE
DIM M
 $FLTCON NMACH=1.0, MACH(1)=2.0, RNNUB=6.56E6,
   NALPHA=5.0, ALSCHD(1)=0.0,5.0,10.0,15.0,20.0,
   NALT=1.0, ALT(1)=27400.0$
 $OPTINS SREF=64.4933,CBARR=5.5077,BLREF=13.9111$
 $SYNTHS XCG=12.1800, ZCG=0.0, SCALE=0.30$
 $BODY NX=19.0,BNOSE=2.0,BTAIL=2.0,BLN=9.144,BLA=0.0,
```

```
   X(1)=1.0,    1.613,  2.673,  3.736,  4.801,
        5.868,  6.934,  8.004,  9.074, 10.144,
       11.214, 12.284, 13.354, 14.420, 15.487,
       16.551, 17.618, 18.675, 19.288,
   S(1)=0.0,   0.268, 0.689, 1.052, 1.360,
        1.613, 1.811, 1.951, 2.036, 2.062,
        2.085, 1.951, 1.811, 1.613, 1.360,
        1.053, 0.689, 0.268, 0.0,
   P(1)=0.0,   0.561, 1.439, 2.198, 2.841,
        3.368, 3.783, 4.072, 4.249, 4.310,
        4.249, 4.072, 3.783, 3.368, 2.841,
        2.198, 1.439, 0.561, 0.0,
   R(1)=0.0,   0.089, 0.229, 0.351, 0.451,
        0.536, 0.600, 0.649, 0.677, 0.686,
        0.677, 0.649, 0.600, 0.536, 0.451,
        0.351, 0.229, 0.089, 0.0$
NACA-W-S-3-30.0-2.5-20.0
NACA-H-S-1-50.0-2.5
 $WGPLNF CHSTAT=0.0,
    SWAFP=0.0,TWISTA=0.0,SSPNDD=0.0,DHDADI=0.0,DHDADO=0.0,TYPE=1.0$
 $SYNTHS XW=3.4579,ZW=0.0,ALIW=0.0$
 $WGPLNF CHRDTP=0.0,SSPNE=1.8913,SSPN=2.4414,CHRDR=4.2276,SAVSI=60.0$
 $SYNTHS XH=9.9672,ZH=0.0,ALIH=0.0$
 $HTPLNF SSPNE=6.5044,SSPN=6.9555,CHRDR=8.1138,SAVSI=38.52,CHSTAT=0.0,
               CHRDTP=1.1582,
   SWAFP=0.0,TWISTA=0.0,SSPNDD=0.0,DHDADI=0.0,DHDADO=0.0,TYPE=1.0,
   SHB(1)=6.8283,
           SEXT(1)=6.8284,RLPH(1)=14.4170$
CASEID BODY PLUS WING PLUS CANARD, EXAMPLE PROBLEM 4, CASE 2
NEXT CASE
```

Input file: ex4.inp

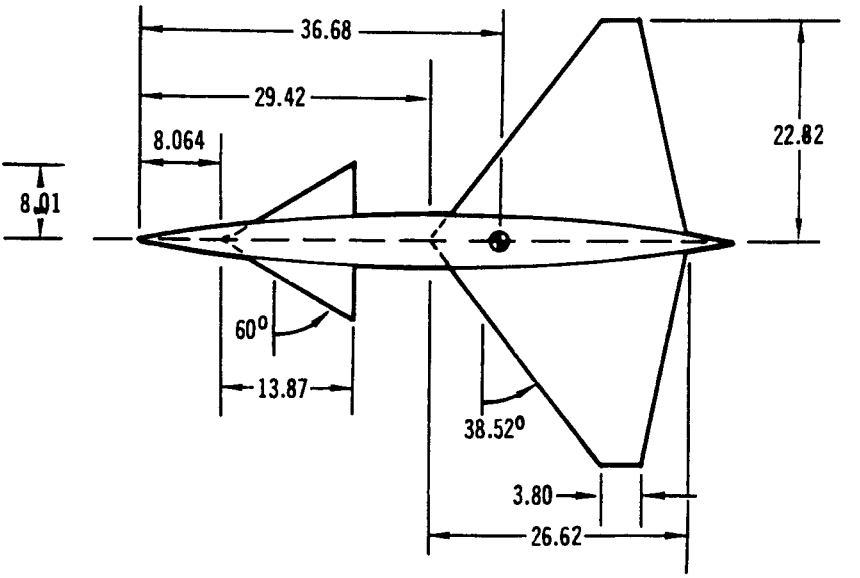

REFERENCE DATA

REFERENCE AREA = 694.2
LONGITUDINAL REF. LENGTH = 18.07
LATERAL REF. LENGTH = 45.64

FLIGHT CONDITION DATA

MACH NUMBER = 0.60
REYNOLDS NO./FT = 3.1×10^6
SCHEDULED ANGLES OF ATTACK = 0.0, 5.0, 10.0, 15.0, 20.0

BODY DATA

X	S	P	R
0.0	0.0	0.0	0.0
2.01	2.89	1.84	0.293
5.49	7.42	4.72	0.752
8.975	11.32	7.21	1.15
12.47	14.64	9.32	1.48
15.97	17.36	11.05	1.76
19.47	19.49	12.41	1.97
22.98	21.0	13.36	2.13
26.49	21.91	13.94	2.22
30.0	22.20	14.14	2.25
33.51	21.90	13.94	2.22
37.02	21.0	13.36	2.13
40.53	19.49	12.41	1.97
44.03	17.36	11.05	1.76
47.53	14.64	9.32	1.48
51.02	11.33	7.21	1.15
54.52	7.42	4.72	0.752
57.99	2.89	1.84	0.293
60.0	0.0	0.0	0.0

WING AND CANARD DATA

AIRFOIL NACA 65A004

FIGURE 32 EXAMPLE PROBLEM 4 DATA

7.5 EXAMPLE PROBLEM 5

The wing-body portion of the configuration used in Example Problem 3 is modified by attaching plain trailing-edge flaps to the wing. This example problem is used to illustrate partial outputs and dynamic derivative input and output. A summary of Example Problem 5 analysis is as follows:

Case No.	Configuration	Mach No.	Comments
1	Body + wing	0.6	PART, DAMP, DUMP DYN
2	Body + wing + plain trailing-edge flaps	0.6	DUMP FCM

The Digital Datcom output data, including a dump of the DYN and FCM common arrays may be found on the CD-ROM. The flap configuration is shown in Figure 33.

```
DIM FT
PART
 $FLTCON  NALPHA=9.0,
ALSCHD(1)=-2.0,0.0,2.0,4.0,8.0,12.0,16.0,20.0,24.0$
 $FLTCON  NMACH=1.0, MACH(1)=0.6, RNNUB(1)=4.26E6$
 $OPTINS SREF=2.25, CBARR=0.822, BLREF=3.00$
 $SYNTHS XCG=2.60, ZCG=0.0, XW=1.70, ZW=0.0, ALIW=0.0$
 $BODY NX=10.0,BNOSE=2.0,BTAIL=1.0,BLN=1.46,BLA=1.97,
   X(1)=0.0, .175,.322,.530,.850,1.46,2.5,3.43,3.97,4.57,
   R(1)=0.0, .0417,.0833,.125,.1665,.208,.208,.208,.178,.138$
 $WGPLNF CHRDTP=0.346, SSPNE=1.29, SSPN=1.5, CHRDR=1.16, SAVSI=45.0,
 CHSTAT=0.25, SWAFP=0.0, TWISTA=0.0, SSPNDD=0.0, DHDADI=0.0,
DHDADO=0.0, TYPE=1.0$
 $WGSCHR TOVC=.06, DELTAY=1.3, XOVC=0.4, CLI=0.0, ALPHAI=0.0,
CLALPA(1)=0.131,
   CLMAX(1)=.82,CMO=0.0,LERI=.0025,CLAMO=.105$
 $WGSCHR  CLMAXL=0.8, TCEFF=.03$
CASEID BODY-WING DAMPING DERIVATIVES, EXAMPLE PROBLEM 5, CASE 1
DAMP
SAVE
DUMP DYN
NEXT CASE
 $SYMFLP NDELTA=6.0, DELTA(1)=0.,.10,.20,.30,.40,.60, PHETE=.0522,
  CHRDFI=.2094, CHRDFO=.1554, SPANFI=0.208, SPANFO=.708, FTYPE=1.0,
  CB=.01125, TC=.0225, PHETEP=.0391, NTYPE=1.0$
CASEID PLAIN FLAPS ON WING, EXAMPLE PROBLEM 5, CASE 2
```

```
DUMP FCM
NEXT CASE
```

FLIGHT CONDITIONS: MACH NUMBER = 0.60
REYNOLDS NUMBERS PER FT = 4.26×10^6
SCHEDULED ANGLES OF ATTACK = −2.0, 0.0, 2.0, 4.0, 8.0, 12.0, 16.0, 20.0, 24.0

REFERENCE PARAMETERS: REFERENCE AREA = 2.25
LONG. REF. LENGTH = 0.822
LATERAL REF. LENGTH = 3.00

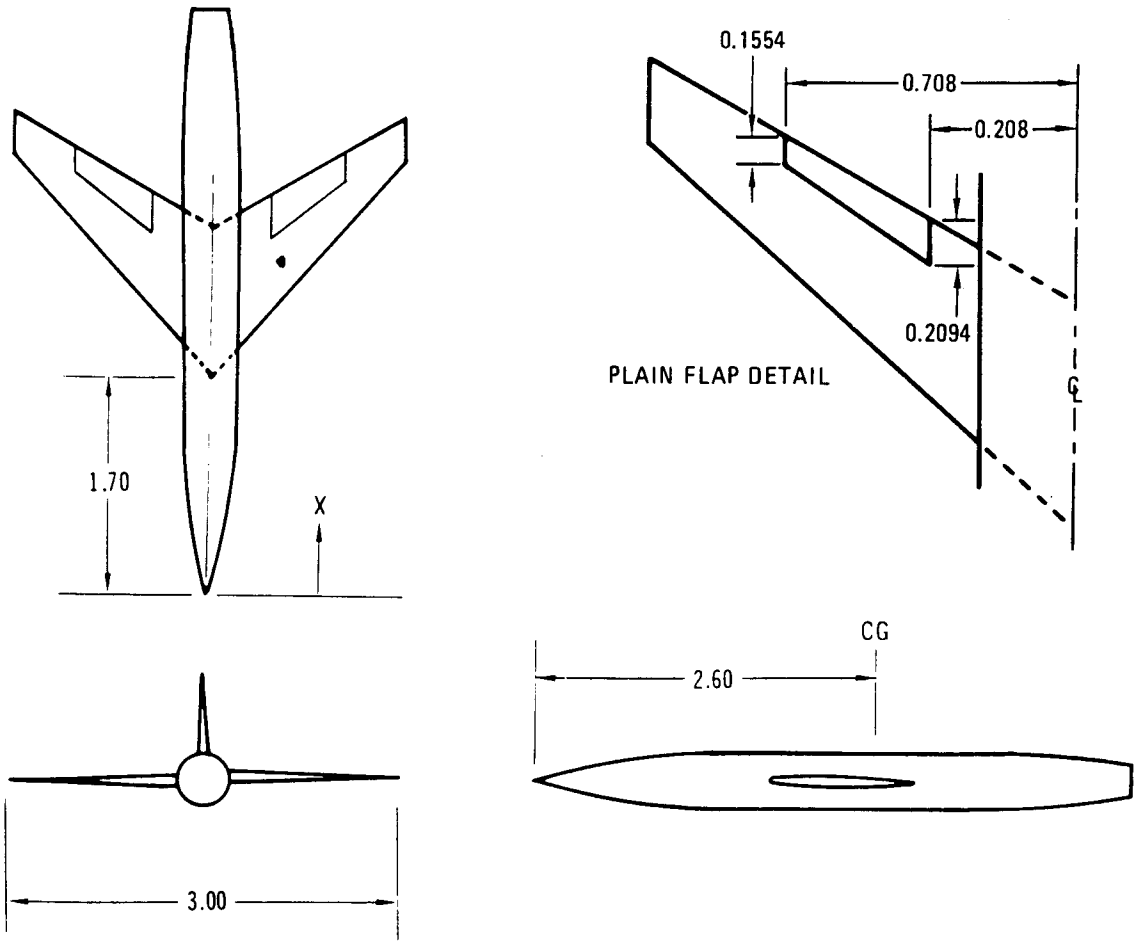

FIGURE 33 EXAMPLE PROBLEM 5 DATA

7.6 EXAMPLE PROBLEM 6

The wing-body configuration of Example Problem 3 is used to illustrate aileron and spoiler input and output data. Figure 34 show the geometry.

```
 $FLTCON  NALPHA=9.0,  ALSCHD=-2.0,0.0,2.0,4.0,8.0,12.0,16.0,20.0,24.0$
 $FLTCON  NMACH=1.0, MACH(1)=0.6, RNNUB(1)=4.26E6$
 $OPTINS SREF=2.25, CBARR=0.822, BLREF=3.00$
 $SYNTHS XCG=2.60, ZCG=0.0, XW=1.70, ZW=0.0, ALIW=0.0$
 $BODY NX=10.0,BNOSE=2.0,BTAIL=1.0,BLN=1.46,BLA=1.97,
   X(1)=0.0, .175,.322,.530,.850,1.46,2.5,3.43,3.97,4.57,
   R(1)=0.0, .0417,.0833,.125,.1665,.208,.208,.208,.178,.138$
 $WGPLNF CHRDTP=0.346,SSPNE=1.29,SSPN=1.5,CHRDR=1.16,SAVSI=45.0,CHSTAT=0.25,
  SWAFP=0.0,TWISTA=0.0,SSPNDD=0.0,DHDADI=0.0,DHDADO=0.0,TYPE=1.0$
 $WGSCHR TOVC=.06,DELTAY=1.3, XOVC=0.4, CLI=0.0, ALPHAI=0.0,
CLALPA(1)=0.131,
  CLMAX(1)=.82,CMO=0.0,LERI=.0025,CLAMO=.105$
 $WGSCHR  CLMAXL=0.8, TCEFF=.03$
 $ASYFLP NDELTA=5.0, DELTAL(1)=5.,10.,20.,30.,40.,
                     DELTAR(1)=-2.,-5.,-10.,-15.,-20.,
         STYPE=4.0, CHRDFI=.1116, CHRDFO=.0692,
         SPANFI=1.109, SPANFO=1.5, PHETE=.0522$
CASEID PLAIN FLAP AILERON, EXAMPLE PROBLEM 6, CASE 1
SAVE
NEXT CASE
 $ASYFLP STYPE=3.0, DELTAD(1)=.0130,.0261,.0380,.0513,.0630,.0750,
   DELTAS(1)=.013, .0261, .030, .0513, .0630, .0750,
   XSOC(1)=.6900,.6955,.6680,.6438,.6454,.6259,
   XSPRME=0.55,
   XSOC(1)=0.0357,0.0710,0.0956,0.1102,0.1365,0.1359$
CASEID SPOILER-SLOT-DEFLECTOR ON WING, EXAMPLE PROBLEM 6, CASE 2
NEXT CASE
```

Input file ex6.inp

FLIGHT CONDITIONS: MACH NUMBER = 0.60
REYNOLDS NUMBERS PER FT = 4.26×10^6
SCHEDULED ANGLES OF ATTACK = −2.0, 0.0, 2.0, 4.0, 8.0, 12.0, 16.0, 20.0, 24.0

REFERENCE PARAMETERS: REFERENCE AREA = 2.25
LONG. REF. LENGTH = 0.822
LATERAL REF. LENGTH = 3.00

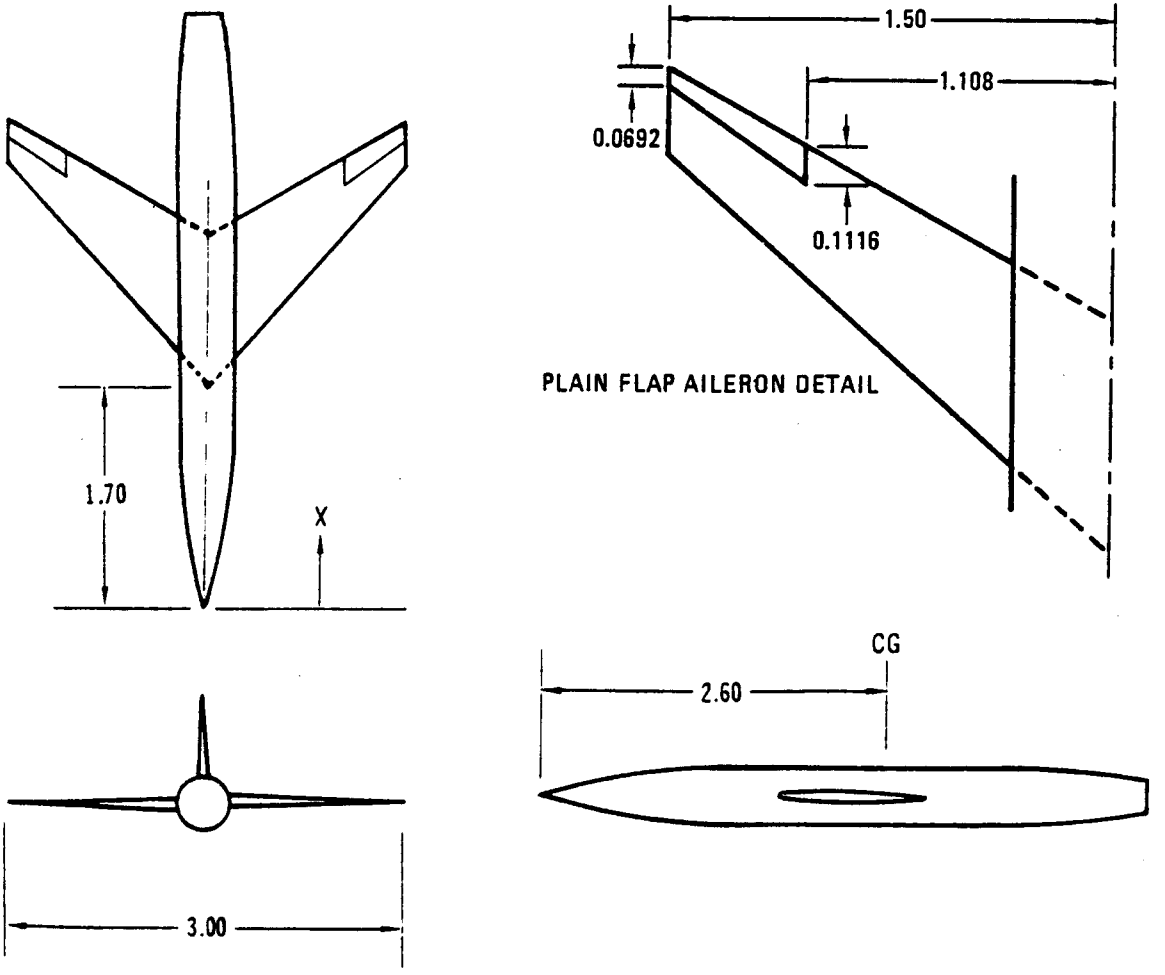

FIGURE 34 EXAMPLE PROBLEM 6 DATA

7.7 EXAMPLE PROBLEM 7

The wing-body-tail configuration of Example Problem 3 is used to illustrate trim control with an elevator on the horizontal tail. In addition, the effect of plain trailing edge flaps on the wing (see Example Problem 5) is included via experimental data input to illustrate a procedure for multiple high-lift and control device analysis. The wing high lift increment is used to update wing-body undeflected totals via namelist EXPRnn.

The geometry is sketched in Figure 35.

```
 $FLTCON NMACH=1.0,MACH(1)=.60, NALPHA=9.0,
    ALSCHD(1)=-2.0,0.0,2.0,4.0,8.0, 12.0,16.0,20.0,24.0,
    RNNUB(1)=2.28E6$
 $OPTINS SREF=2.25,CBARR=0.822,BLREF=3.0$
 $SYNTHS XCG=2.60, ZCG=0.0, XW=1.70, ZW=0.0, ALIW=0.0, XH=3.93,
    ZH=0.0,ALIH=0.0, XV=3.34,VERTUP=.TRUE.$
 $BODY NX=10.,
    X(1)=0.0,  0.175, 0.322, 0.530, 0.85,
         1.46, 2.50,  3.43,  3.97,  4.57,
    R(1)=0.0,   0.0417, 0.0833, 0.125, 0.1665,
         0.208, 0.208,  0.208,  0.178, 0.138$
 $WGPLNF CHRDTP=0.346, SSPNE=1.29, SSPN=1.50, CHRDR=1.16, SAVSI=45.0,
    CHSTAT=0.25, SWAFP=0.0, TWISTA=0.0, SSPNDD=0.0, DHDADI=0.0,
    DHDADO=0.0, TYPE=1.0$
 $WGSCHR TOVC=0.060, DELTAY=1.30, XOVC=0.40, CLI=0.0, ALPHAI=0.0,
    CLALPA(1)=0.131, CLMAX(1)=0.82, CMO=0.0, LERI=0.0025,      CLAMO=0.105$
 $WGSCHR CLMAXL=0.78$
 $VTPLNF CHRDTP=0.420, SSPNE=0.63, SSPN=0.849, CHRDR=1.02,     SAVSI=28.1,
    CHSTAT=0.25, SWAFP=0.0, TWISTA=0.0, TYPE=1.0$
 $VTSCHR TOVC=0.09, XOVC=0.40, CLALPA(1)=0.141, LERI=0.0075$
 $HTPLNF CHRDTP=0.253, SSPNE=0.52, SSPN=0.67, CHRDR=0.42, SAVSI=45.0,
    CHSTAT=0.25, SWAFP=0.0, TWISTA=0.0, SSPNDD=0.0, DHDADI=0.0,
    DHDADO=0.0, TYPE=1.0$
 $HTSCHR TOVC=0.060, DELTAY=1.30, XOVC=0.40, CLI=0.0, ALPHAI=0.0,
    CLALPA(1)=0.131, CLMAX(1)=0.82, CMO=0.0, LERI=0.0025,CLAMO=0.105$
 $SYMFLP FTYPE=1.0, NDELTA=9.0,
    DELTA(1)=-60.0, -40.0, -20.0, -10.0, 0.0, 10.0, 20.0, 40.0, 60.0,
    PHETE=0.0522, PHETEP=0.0523, SPANFI=0.18, SPANFO=0.670, CHRDFI=0.075,
    CHRDFO=0.051, CB=0.0038, TC=0.0076, NTYPE=1.0,$
 $EXPR01 CLWB(1)=0.09,0.204,0.330,0.450,0.690,0.895,1.070,1.180,1.174$
TRIM
CASEID INCLUDES HIGH LIFT EFFECT ON WING, EXAMPLE PROBLEM 7
NEXT CASE
```

Input file ex7.inp

FLIGHT CONDITIONS: MACH NUMBER = 0.60
REYNOLDS NUMBERS PER FT = 2.28×10^6
SCHEDULED ANGLES OF ATTACK = −2.0, 0.0, 2.0, 4.0, 8.0, 12.0, 16.0, 20.0, 24.0

REFERENCE PARAMETERS: REFERENCE AREA = 2.25
LONG. REF. LENGTH = 0.822
LATERAL REF. LENGTH = 3.00

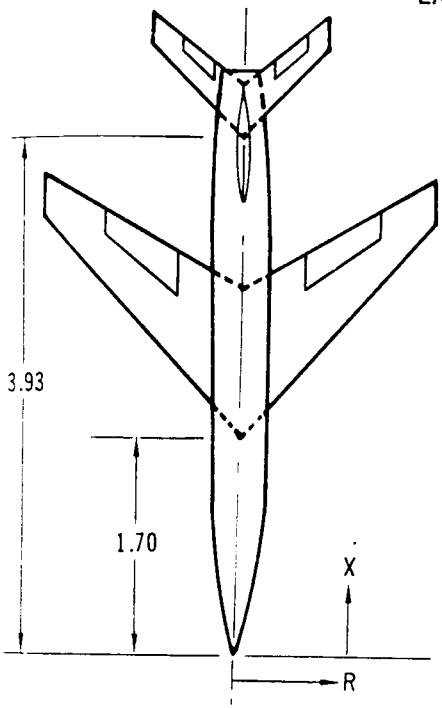

	WING	HORIZONTAL TAIL	VERTICAL TAIL
SEMISPAN	1.50	0.67	0.849
EXPOSED SEMISPAN	1.29	0.52	0.630
c_t	0.346	0.253	0.42
c_R	1.16	0.420	1.02
$\Lambda_{c/4}$	45^0	45^0	28.1
AIRFOIL	NACA 65A006	NACA 65A006	NACA 63A009

PLAIN FLAP EFFECT ADDED AS EXPERIMENTAL DATA SUBSTITUTION

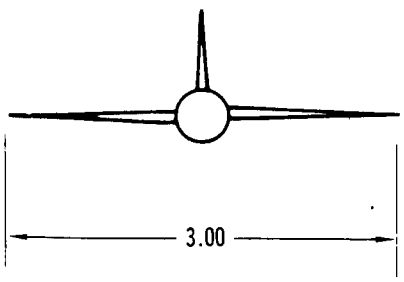

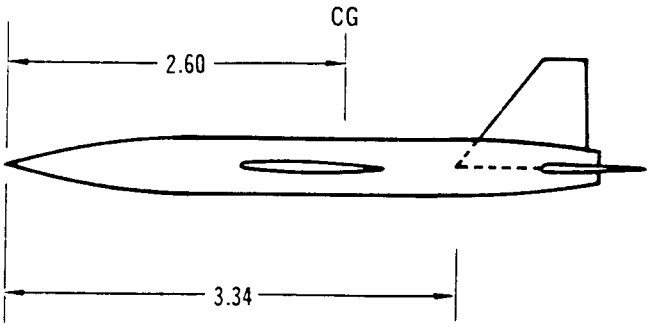

FIGURE 35 EXAMPLE PROBLEM 7 DATA

7.8 EXAMPLE PROBLEM 8

The all-movable horizontal trim case is illustrated using the configuration of Example Problem 3. Note that a hinge-axis distance is specified in namelist SYNTHS and a TRIM control card is present in the case.

```
 $FLTCON  NMACH=1.0, MACH(1)=0.6,
  NALPHA=9.0, ALSCHD(1)=-2.0,0.0,2.0,4.0,8.0,12.0,16.0,20.0,24.0,
  RNNUB(1)=2.28E6$
 $OPTINS SREF=2.25, CBARR=0.822, BLREF=3.00$
 $SYNTHS XCG=2.60, ZCG=0.0, XW=1.70, ZW=0.0, ALIW=0.0, XH=3.93,
   ZH=0.0, ALIH=0.0, XV=3.34, VERTUP=.TRUE.$
 $SYNTHS HINAX=4.271$
 $BODY NX=10.0,
   X(1)=0.0, .175,.322,.530,.850,1.46,2.5,3.43,3.97,4.57,
   R(1)=0.0, .0417,.0833,.125,.1665,.208,.208,.208,.178,.138$
 $WGPLNF CHRDTP=0.346, SSPNE=1.29, SSPN=1.5, CHRDR=1.16, SAVSI=45.0,
    CHSTAT=0.25, SWAFP=0.0, TWISTA=0.0, SSPNDD=0.0,
    DHDADI=0.0, DHDADO=0.0, TYPE=1.0$
 $WGSCHR TOVC=0.06, DELTAY=1.3, XOVC=0.4, CLI=0.0, ALPHAI=0.0,
    CLALPA(1)=0.131, CLMAX(1)=.82, CMO=0.0, LERI=0.0025, CLAMO=0.105$
 $WGSCHR CLMAXL=0.78$
 $VTPLNF CHRDTP=0.42, SSPNE=0.63, SSPN=0.849, CHRDR=1.02, SAVSI=28.1,
  CHSTAT=.25, SWAFP=0.0, TWISTA=0.0, TYPE=1.0$
 $VTSCHR TOVC=0.09, XOVC=0.4, CLALPA(1)=0.141, LERI=0.0075$
 $HTPLNF CHRDTP=0.253, SSPNE=0.52, SSPN=0.67, CHRDR=0.42, SAVSI=45.0,
   CHSTAT=0.25, SWAFP=0.0, TWISTA=0.0, SSPNDD=0.0, DHDADI=0.0,     DHDADO=0.0,
TYPE=1.0$
 $HTSCHR TOVC=0.06, DELTAY=1.3, XOVC=0.4, CLI=0.0, ALPHAI=0.0,
  CLALPA(1)=.131, CLMAX(1)=0.82, CMO=0.0, LERI=.0025, CLAMO=.105$
CASEID ALL MOVEABLE HORIZONTAL TAIL, EXAMPLE PROBLEM 8
TRIM
NEXT CASE
```

Input file ex8.inp

7.9 EXAMPLE PROBLEM 9

Problem 9 consists of a lifting body configuration with a delta planform, sharp leading edge, and symmetrical diamond cross section. Pertinent data for this configuration are shown in Figure 36.

```
 $FLTCON NMACH=1.0, MACH(1)=0.26, NALPHA=6.0,
  ALSCHD=-5.0, 0.0, 5.0, 10.0, 15.0, 20.0, RNNUB(1)=1.868E6$
 $LARWB ZB=0.0, SREF=0.989, DELTEP=90.0, SFRONT=0.307, AR=1.076,
   L=1.915, SWET=2.28, PERBAS=2.38, SBASE=0.307, HB=0.595, BB=1.03,
BLF=.FALSE., XCG=1.44, THETAD=15.0, ROUNDN=.FALSE., SBS=0.57,
SBSLB=0.0228,  XCENSB=1.277, XCENW=1.277$
CASEID LIFTING BODY WITH SHARP LEADING EDGE, EXAMPLE PROBLEM 9
NEXT CASE
```

Input file ex9.inp

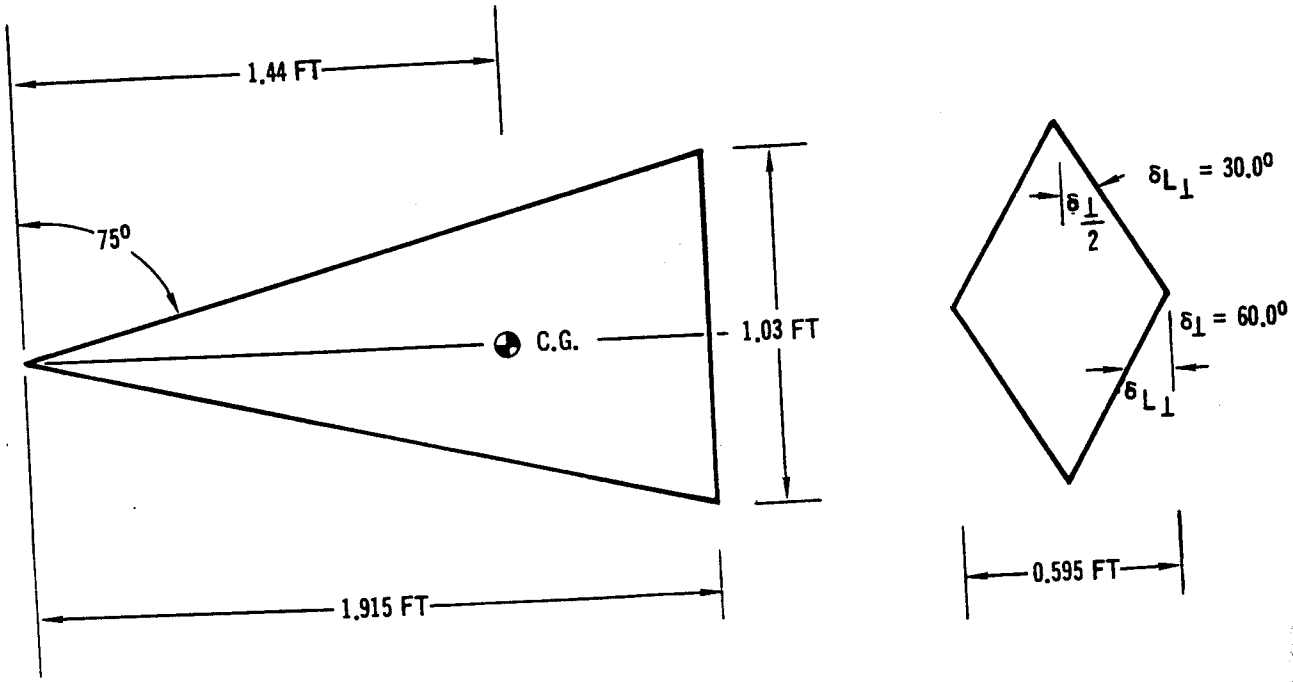

ZB = 0.0
$S_{REF} = S_{PLAN} = 0.989\ FT^2$
$DELTEP = \delta_\perp + \delta_{L_\perp} = 30.0 + 60.0 = 90.0°$
$SFRØNT = S_{BASE} = 0.307\ FT^2$
AR = 1.076
L = 1.915 FT
$S_{WET} = 2.28\ FT^2$
PERBAS = 2.38 FT
HB = 0.595
BB = 1.03
BLF = .FALSE.
XCG = 1.44
THETAD = 15.0
RØUNDN = FALSE
R3LEØB = NOT REQUIRED, SHARP LEADING EDGE
DELTAL = NOT REQUIRED, SHARP LEADING EDGE
$SBS = 0.57\ FT^2$
$SBSLB = 0.0228\ FT^2$
XCENSB = 1.277 FT
XCENW = 1.277 FT

FIGURE 36 EXAMPLE PROBLEM 9 DATA

7.10 EXAMPLE PROBLEM 10

This problem demonstrates the analysis of the transverse control jet in hypersonic flow located on a flat plate, as shown in Figure 37.

```
 $FLTCON NMACH=1.0, MACH(1)=10.0, RNNUB(1)=1.0E7, PINF(1)=10.0,
   HYPERS=.TRUE.,$
 $TRNJET TIME(1)=1.,2.,3.,4.,5.,     FC(1)=1000.,2000.,1000.,500.,200.,
   ALPHA(1)=0.0, 3.0, 6.0, 9.0, 13.0,
   LAMNRJ=.FALSE., .FALSE., .FALSE., .FALSE., .TRUE.,
   ME=2.39, ISP=225.0, SPAN=2.0, PHE=30.0, GP=1.2, CC=90.0, LFP=10.0$
CASEID TRANSVERSE-JET SIZING, EXAMPLE PROBLEM 10
DUMP JET
NEXT CASE
```

Input file ex10.inp

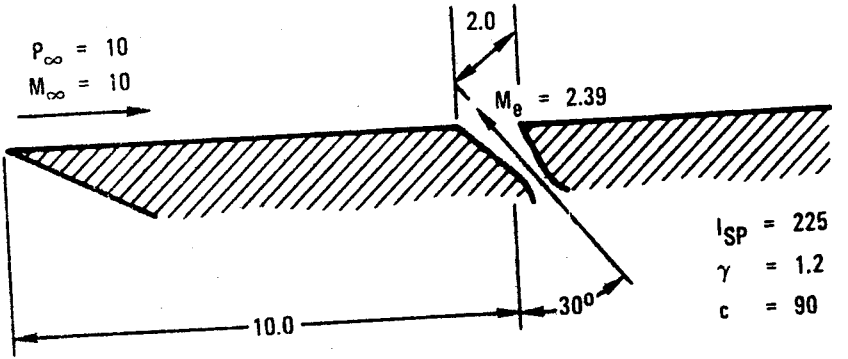

FIGURE 37 EXAMPLE PROBLEM 10 DATA

7.11 EXAMPLE PROBLEM 11

The use of a hypersonic control flap is demonstrated in this example. Pertinent geometry is shown in Figure 38.

```
 $FLTCON NMACH=1.0, MACH(1)=10.0, RNNUB(1)=1.06E5,
   NALPHA=5.0, ALSCHD(1)=0.0,5.0,10.0,15.0,20.0,
   HYPERS=.TRUE.$
 $OPTINS SREF=1.0, CBARR=1.0$
 $HYPEFF ALITD=15000.0, XHL=8.0, TWOTI=3.122, CF=2.0,
   HDELTA(1)=0.,2.,4.,6.,10.,12.,16.,20.,25.,30.,
   LAMNR=.TRUE., HNDLTA=10.0$
CASEID FLAT PLATE WITH FLAP IN HYPERSONIC FLOW, EXAMPLE PROBLEM 11
NEXT CASE
```

Input file ex11.inp

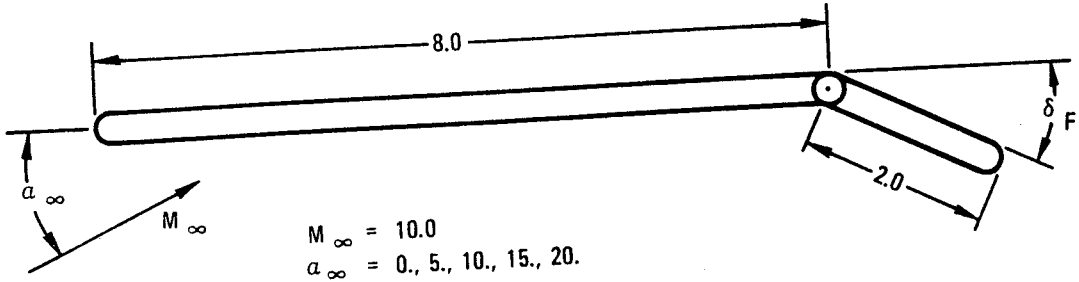

$M_\infty = 10.0$

$\alpha_\infty = 0., 5., 10., 15., 20.$

$R_{N_\infty} = 1.06 \times 10^5$

$h = 150{,}000$

$\delta_F = 0., 2., 4., 6., 10., 12., 16., 20., 25., 30.$

FIGURE 38 EXAMPLE PROBLEM 11 DATA

APPENDIX A

NAMELIST CODING RULES

Digital Datcom utilizes the namelist input technique because it is more convenient and flexible than formatted input. The namelist coding rules that follow are compatible with both CDC and IBM computer systems. The input diagnostic analysis module (CØNERR) tests all of the input and flags any violations of these rules, but it does not correct input errors. Digital Datcom will always execute the data as input by the user regardless of the errors sensed by CØNERR.

1. Namelist input data may appear in any card column from 2 to 80. Column 1 cannot be used (control cards are the only exception to this rule).
2. Namelist names cannot contain imbedded blanks and must be preceeded by a $ (& on IBM systems). The $ must appear in Column 2 and the name begins in Column 3. A blank must follow the namelist name.
3. Namelist data sets are terminated by a $ or $END (&END on IBM systems).
4. Variable values are specified using one of the two following forms:

   vname = c,

   or aname = c_1, c_2, c_3, ..., c_n,

   where: vname is a variable name,

   aname is an array name, and

   c, c_1, c_2, c_3, ..., c_n are numeric constants

   Variable names cannot contain imbedded blanks.
5. Each input constant must be immediately followed by a comma (no blanks) and must not contain imbedded blanks.
6. Namelist variables may be in any order.
7. Not all namelist variables need be input.
8. Namelist variables may appear more than once in a namelist data set. The last value will be used.
9. Multiple occurrences of the same constant in a namelist variable array can be represented in the form K*C, where K is the number of successive occurrences and C is the numeric constant. The repetition factor, K, must be an unsigned integer followed by an asterisk.

TABLE A–1 CORRECT NAMELIST CODING

1 2 80

```
$FLTCØN NMACH=3.0,  MACH(1)=.3, 1.2, 5.0, NALPHA=6., ALSCHD(1)=0.,2.,4.,6.,10.,15.$
```

1 2 12 5 10 3

```
$ØPTINS  SREF=2.25, CBARR=0.822, BLREF=3.00, CBARR=0.750$
```

6 8

7: RØUGFC NOT INPUT

```
$BØDY NX=10., BNØSE=2.0, BTAIL=1.0, BLN=1.46, BLA=1.97, X(1)=0., .175, .322, .53,
.85, 1.5, 2.5, 3.57, 3.97, 4.57, R(1)=0., .0417, .08, .125, .17, 3*.208, .178, .138$
```

1 10 9 11

10. On CDC systems, if all the elements of an array are not specified, the array name must be subscripted with the index for the first element to be filled; i.e., aname (i)=C_i, C_{i+1},..., C_n, where i is the index corresponding to C_i. Array dimensions for all namelist variables in Digital Datcom are specified for each namelist name in Section 3 of this report.

11. Each card that is to be continued must end with constant followed by a comma.

12. All Digital Datcom numeric constants should specify a decimal point. All variables, except logical variables are declared type "REAL".

Examples illustrating these rules are shown in Tables A-1 and A-2. Each namelist rule is designated by its number.

TABLE A–2 INCORRECT NAMELIST CODING

```
1 2                                                                                                                                                                                                                                                                                                                                                                                                                                                                                                                                                                                                                                                                                                                                                                                                                                                                                                                                                                                                                                                                                                                                                                                                                                                                                                                                                                                                                                                                                                                                                                                                                                                                                                                                                                                                                                                                                                                                                                                                                                                                                                                                                                                                                                                                                                                                                                                                                                                                                                                                                                                                                                                                                                                                                                                                                                                                                                                                                                                                                                                                                                                                                                                                                                                                                                                                                                                                                                                                                                                                                                                                                                                                                                                                                                                                                                                                                                                                                                                                                                                                                                                                                                                                                                                                                                                                                                                                                                                                                                                                                                                                                                                                                                                                                                                                                                                                                                                                                                                                                                                                                                                                                                                                                                                                                                                                                                                                                                                                                                                                                                                                                                                                                                                                                                                                                                                                                                                                                                                                                                                                                                                                                                                                                                                                                                                                                                                                                                                                                                                                                                                                                                                                                                                                                                                                                                                                                                                                                                                                                                                                                                                                                                                                                                                                                                                                                                                                                                                                                                                                                                                                                                                                                                                                                                                                                                                                                                                                                                                                                                                                                                                                                                                                                                                                                                                                                                                                                                                                                                                                                                                                                                                                                                                                                                                                                                                
$ FLTCØN N MACH=3, MACH=.3, 1.2, 5.0 NALPHA=6., ALSCHD(1)=0., 2., 4., 6., 10., 15. $
```

(2) BLANKS NOT ALLOWED.

(5) NAMELIST DATA NOT SEPARATED BY A COMMA.

(10) ENTIRE ARRAY NOT FILLED, SUBSCRIPT MISSING.

(12) ALL INPUTS MUST SPECIFY A DECIMAL POINT.

(1) COLUMN ONE CANNOT BE USED

```
$ ØPT INS SREF=2.25, CBARR=0.822, BLREF=3.00, CBARR=0.750
```

(2) BLANKS NOT ALLOWED

(3) NO TERMINATION $

```
$BØDYNX=10., BNØSE=2.0, BTAIL=1.0, BLN=1.46, BLA=1.97, X(1)=0., .175, .322, .53
. 5, 1.5, 2.5, 3.57, 3.97, 4.57, R(1)=0., .0417, .08, .125, .17,3*.208, .178, .138$
```

(2) SPACE MUST FOLLOW NAMELIST NAME.

(11) NO COMMA FOR CONTINUATION

(1) COLUMN ONE CANNOT BE USED.

80

APPENDIX B

AIRFOIL SECTION CHARACTERISTICS ESTIMATION TECHNIQUES

B.1 INTRODUCTION

The Airfoil Section Module enables the user to specify the wing, horizontal tail, vertical tail, and/or ventral fin airfoil section characteristics by either specifying the NACA designation or the section coordinates. The use of this module can eliminate the need of defining most of the airfoil section characteristics for the namelists WGSCHR, HTSCHR, VTSCHR, and VFSCHR.

The module was written to maintain user flexibility. The user can supply data for any section characteristic and utilize the module to supply the remaining parameters. User supplied data will always take precedence.

This module can calculate the section characteristics of virtually an unlimited number conventional shaped airfoils, whereas, Datcom methods exist for only a limited number of airfoil sections.

B.2 MODULE METHODS

B.2.1 Geometric Properties

User inputs, either by NACA designation or airfoil geometry coordinates (see Sections 2.4 and 3.5), are used to calculate the airfoil upper and lower surface cartesian coordinates, and thickness and camber line distribution. Surface coordinates are determined from the NACA designation using the methods of Kinsey and Bowers, Reference 5. These coordinates are then used to calculate the Digital Datcom namelist input variables Δy, $(x/c)_{max}$ and $(t/c)_{max}$. The leading edge radius (R_{LE}) is calculated internally for NACA specified sections, and has been left as a user input for other sections. However, the module will calculate R_{LE} using the input section coordinates if the variable is not input. Figures B-1 and B-2 are reproduced from Datcom (Datcom Figures 2.2.1-7 and 2.2.1-8) and presents R_{LE} and Δy for several standard airfoils.

B.2.2 Aerodynamic Section Characteristics

The pressure distribution about the airfoil is calculated in incompressible, inviscid flow by the method of singularities (References 2-4). The distribution of the singularities is derived from a conformal transformation of thirty-two fixed points on the airfoil to points equally spaced

about a circle in a transformed plane. Since the solution for inviscid flow about a circle is known, the velocities about the airfoil are calculated by an inverse transformation (back into the physical plane).

In order to adequately define the airfoil shape and ensure a smooth continuous geometric interpolation for the transformation, a curve describing the airfoil surface is constructed. This curve is constructed by fitting the overall geometry by a left-hand parabola joined to a series of cubic curves, and finally a right-hand parabola. This technique yields a function which is continuous and has continuous derivatives everywhere.

The velocity and pressure distribution derived from the conformal transformation analysis are used to calculate the airfoil section ideal aerodynamic parameters for Digital Datcom. They are also used to calculate the remaining section aerodynamic parameters at the zero-lift angle of attack for the user specified Mach and Reynolds numbers. The viscous correction to section lift curve slope, from Kinsey and Bowers (Reference 5), is given as follows:

$$\frac{C_{\ell_\alpha}}{(C_{\ell_\alpha})_{\text{Theoretical}}} = 1-[\ln(Re/10^5)]^n\left\{.232 + 1.785\ \mathrm{TAN}(\tau_a/2)-2.95\ \mathrm{TAN}^2(\tau_a/2)\right\}$$

$$n = -1 + (5/2)\ \mathrm{TAN}(\tau_a/2)$$

Re = Reynolds Number

T_{90} = Thickness at X = .9c

T_{99} = Thickness at X = .99c

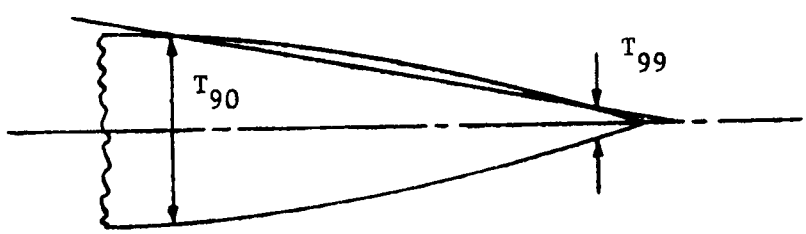

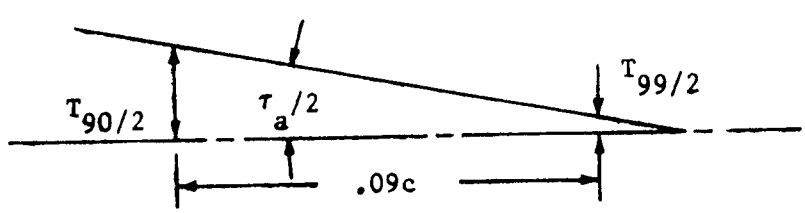

In addition to the viscous correction, a 5% correlation factor (suggested in Datcom, page 4.1.1.2-2) is applied to bring the results in line with experimental data.

The airfoil section maximum lift, $c_{\ell_{max}}$, is calculated using the Datcom method (Datcom Section 4.1.1.4). The equation for $c_{\ell_{max}}$ is:

$$c_{\ell_{max}} = (c_{\ell_{max}})_{base} + \Delta_1 c_{\ell_{max}} + \Delta_2 c_{\ell_{max}} + \Delta_3 c_{\ell_{max}} + \Delta_4 c_{\ell_{max}} + \Delta_5 c_{\ell_{max}}$$

Individual terms are discussed below.

$(c_{\ell_{max}})_{base}$ is obtained from Figure B-3 as a function of Δy and position of maximum thickness. The Δy parameter for a cambered airfoil is the same as that of the corresponding uncambered airfoil, that is, the uncambered airfoil having the same thickness distribution. The $(c_{\ell_{max}})_{base}$ value is for uncambered airfoils with smooth leading edges at 9×10^6 Reynolds number and low speed conditions.

$\Delta_1 c_{\ell_{max}}$ accounts for the effect of camber for airfoils having the maximum thickness at 30 percent chord. Figure B-4 gives this parameter as a function of percent camber and maximum camber location.

$\Delta_2 c_{\ell_{max}}$ amounts to an increment by which $\Delta_1 c_{\ell_{max}}$ must be adjusted for airfoils with maximum thickness located at a position other than 30 percent chord (if maximum thickness is at 30 percent chord or $\Delta_1 c_{\ell_{max}}$ is zero, $\Delta_2 c_{\ell_{max}}$ is zero), presented in Figure B-5.

$\Delta_3 c_{\ell_{max}}$, presented in Figure B-6, gives the list increment due to Reynolds number for Reynolds numbers other than 9×10^6.

$\Delta_4 c_{\ell_{max}}$, shown in Figure B-7, gives the lift increment due to roughness. The roughness in this case is the standard NACA roughness and is presented by 0.011 inch grit applied over the first 8 percent of chord. The curve is only an indication of roughness effect. Actual roughnesses vary considerably, and the effects may be quite different from those shown. As a result, this parameter is not calculated.

$\Delta_5 c_{\ell_{max}}$ is a correction for Mach numbers greater than approximately 0.2. No generalized charts for Mach effects are available in Datcom, therefore, this parameter is not calculated by Digital Datcom. The lift increment due to Mach number should be obtained from test data of similar airfoils when available. Figure B-8 shows representative effects on selected airfoils.

As a possible alternate to the above procedure, $c_{\ell_{max}}$ for standard airfoils at Mach numbers $\leq$ 0.20 and a Reynolds number of nine million are given in Datcom Section 4.1.1.4. These coefficients need be corrected only for Reynolds number, roughness, and Mach number.

B.3 LIMITATIONS AND MODULE DEFAULTS

B.3.1 Crest Critical Conditions

When calculating the airfoil section characteristics of user defined or NACA airfoils, the transonic crest critical conditions are computed (Niedling, Reference 6).

The crest critical Mach number is precisely defined as that free stream Mach number for which local sonic flow is first reached at the airfoil surface crest on the assumption of shock free flow. Its significance is founded on its relation to the drag rise Mach number.

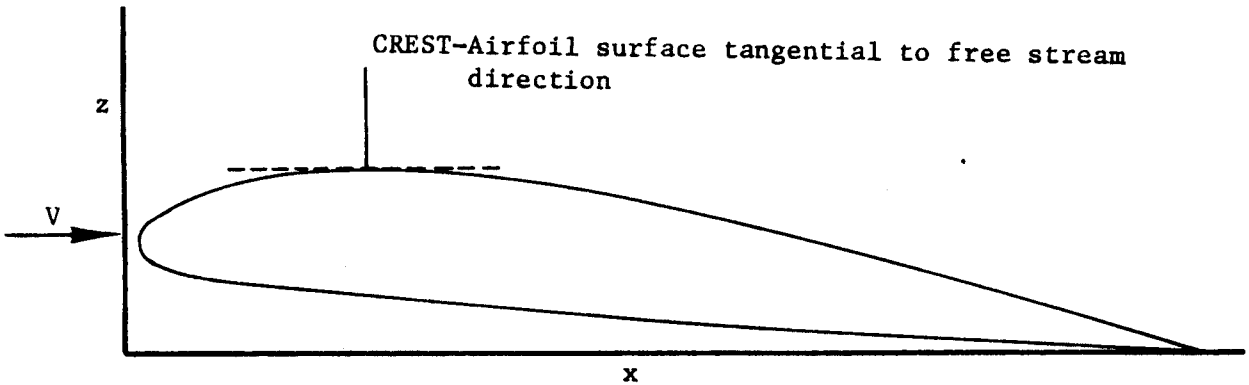

If the user requests data for subsonic Mach numbers greater than the crest critical Mach number, airfoil section data at the crest critical Mach number are used.

B.3.2 Limitations on Geometry

When specifying the airfoil geometry by cartesian coordinates or thickness/camber distribution, the user should input data near the airfoil leading edge to prevent the surface curve-fits from calculating an infinite slope. This is easily accomplished by supplying data at X-stations 0., 0.001, 0.002, and 0.003. The user should note that results degrade with increasing camber or thickness. Generally, accuracy may deteriorate for cambers greater than 6% chord or maximum thickness greater than 12% chord.

B.3.3 Transonic and Supersonic Airfoils

The inputs for transonic and supersonic airfoils consist primarily of geometry inputs. If an airfoil is defined by coordinates or the NACA card,

all of the required inputs execpt for TCEFF are computed. Procedures for computing specific section data are given below.

Namelist variable TCEFF is the effective thickness ratio of the planform expressed as a fraction of chord. For straight tapered planforms it equals the mean thickness ratio. For nonstraight tapered planforms, the effective thickness ratio is defined in terms of the basic planform and is given by

$$\text{TCEFF} = \left[\frac{\int_0^{b/2} \left(\frac{t}{c}\right)^2 c \, dy}{\int_0^{b/2} c \, dy}\right]^{1/2} = \left[\frac{\int_0^{b/2} \left(\frac{t}{c}\right)^2 c \, dy}{\frac{S}{2}}\right]^{1/2}$$

The basic planform is the straight-tapered planform obtained by extending the leading and trailing edges of the outboard panel into the vehicle centerline. TCEFF is used to calculate wave drag in the supersonic and hypersonic regimes. A graphical procedure for determining TCEFF is summarized in Figure B-9. Section (t/c) is assumed to be $(t/c)_{EFF}$ of the planform by the ASM if it is not user defined.

Namelist variable KSHARP is a wave-drag factor for sharp nosed airfoils and should not be specified for round-nosed airfoils. For wings with variable thickness ratios, KSHARP should be defined for the section at the mean chord. This parameter is used to calculate wave drag for sharp-nosed airfoils in the supersonic and hypersonic speed regimes. Values of KSHARP for several sharp-nosed airfoils are presented in Figure 8.

Namelist variable SLØPE is the angle between the chord plane and the local tangent at the airfoil surface at 0, 20, 40, 60, 80 and 100 percent chord expressed in degrees. Angles are positive when the local tangents intersect the chord plane ahead of the reference chord point for the tangent. SLØPE parameters are used to calculate supersonic downwash effects and thus are required only for configurations which have a horizontal tail. For cambered airfoils, the upper-surface slopes should be used if the tail is above the wing and conversely lower-surface slopes should be used in the tail is below the wing. Configurations with wing and tail located at the same z-location should have lower surface values specified. If the combination of SLØPE, angle of attack, and Mach number results in a detached

shock, no wing-body-tail results will be generated and an appropriate message will be output. Reflexed trailing edges are not permitted. This variable is automatically computed for a user specified airfoil, either by coordinates or use of the "NACA" card.

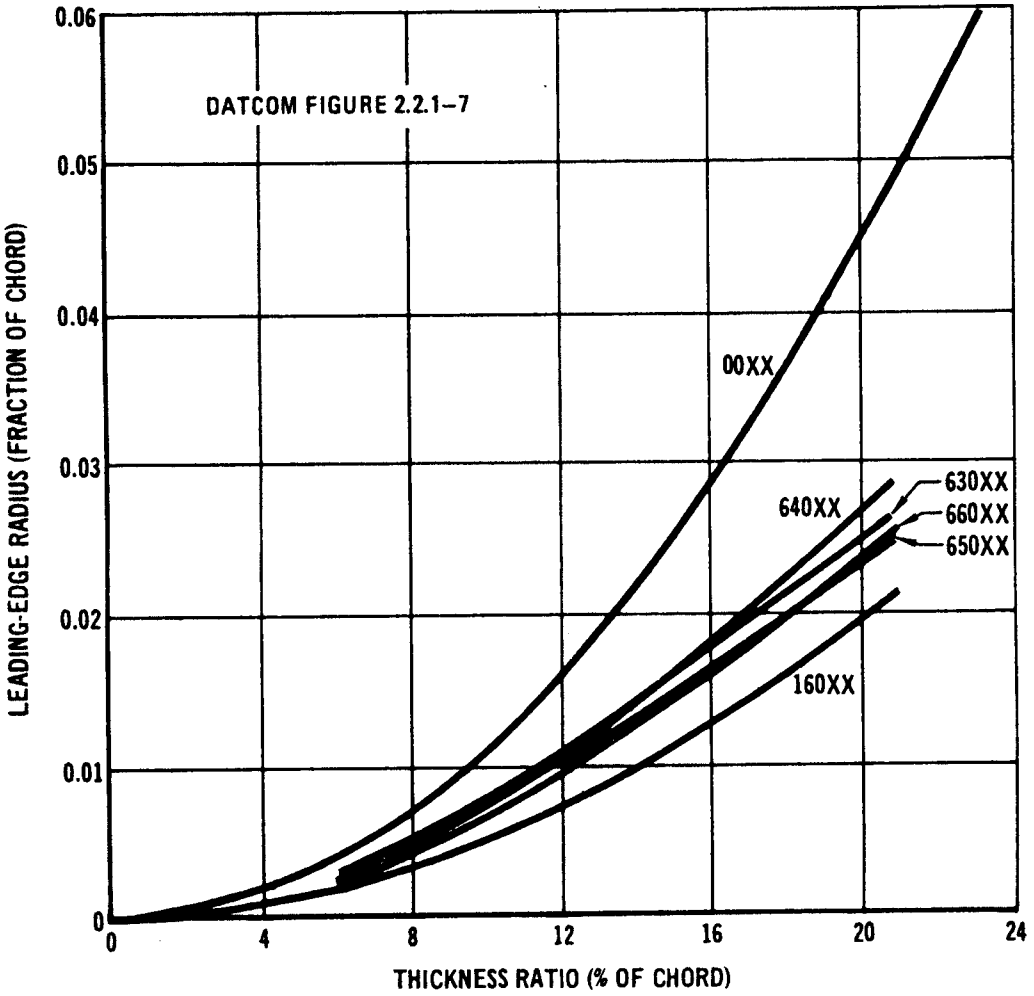

FIGURE B–1 VARIATION OF LEADING-EDGE RADIUS WITH THICKNESS RATIO OF AIRFOILS

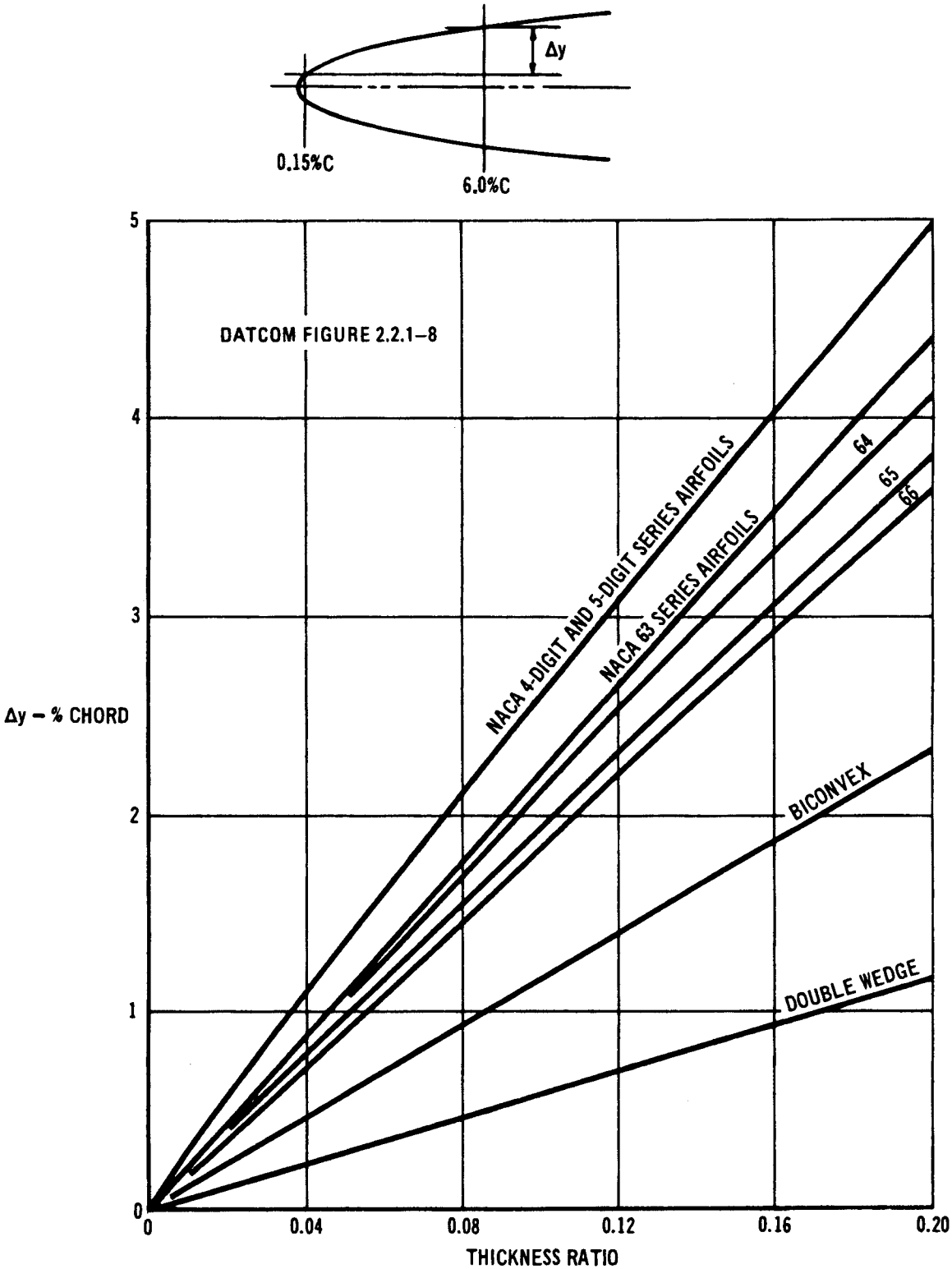

FIGURE B–2 VARIATION OF LEADING-EDGE SHARPNESS PARAMETER WITH AIRFOIL THICKNESS RATIO

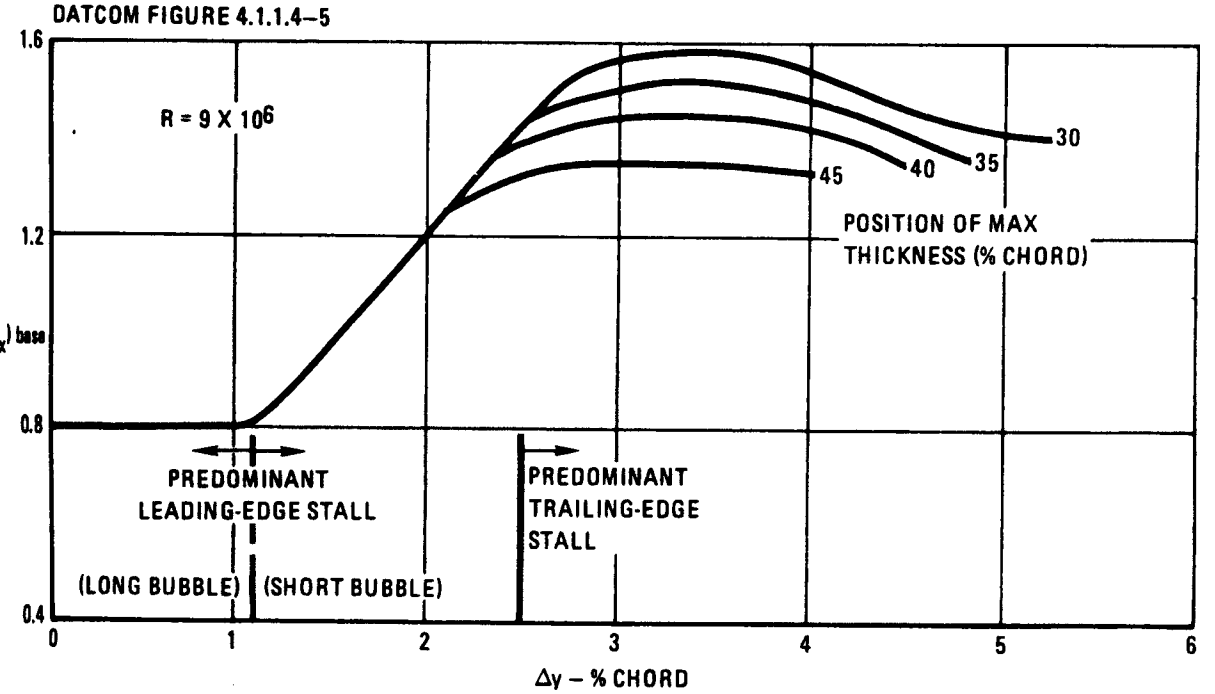

FIGURE B–3 AIRFOIL SECTION MAXIMUM LIFT COEFFICIENT OF UNCAMBERED AIRFOILS

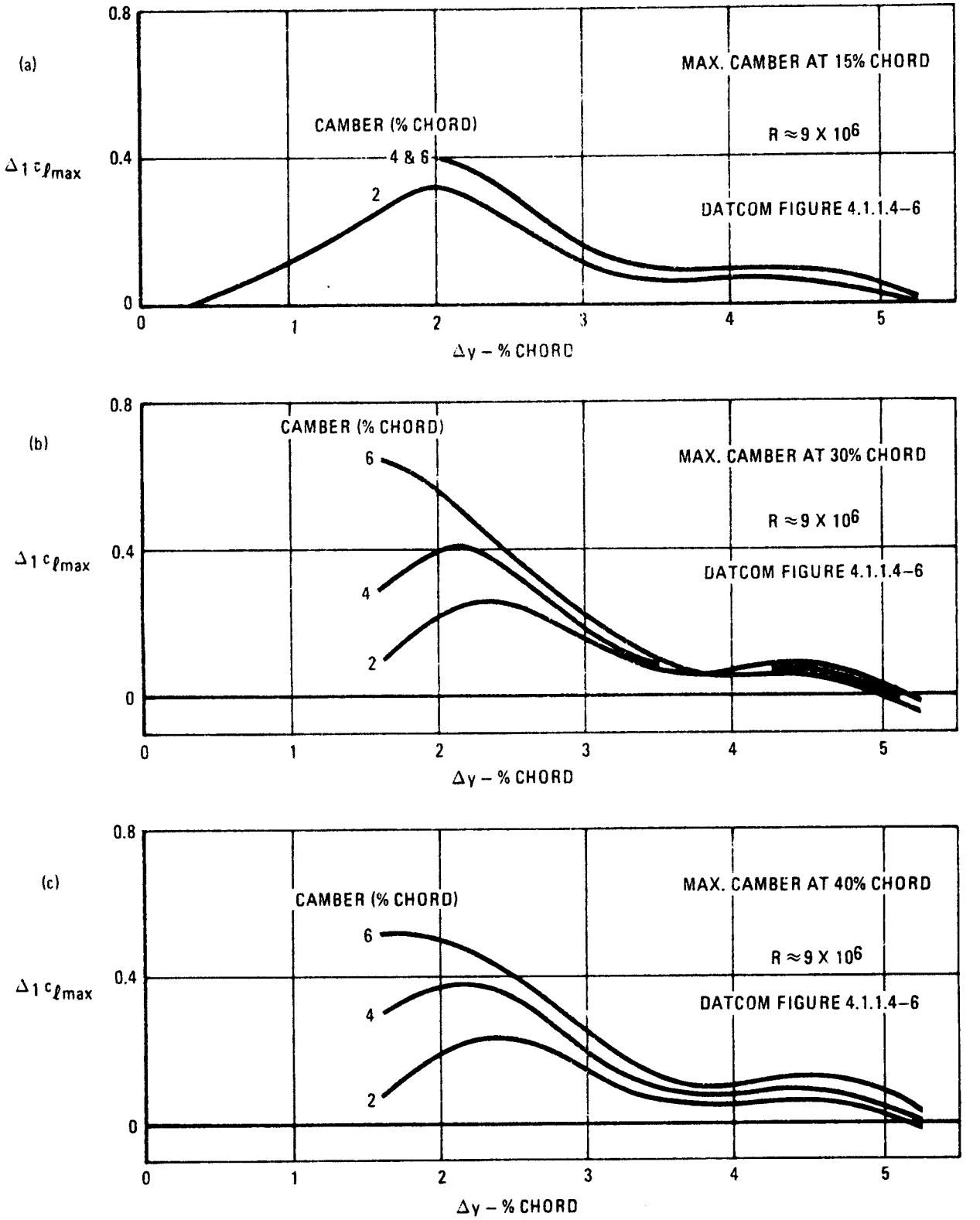

FIGURE B–4 EFFECT OF AIRFOIL CAMBER LOCATION AND AMOUNT ON SECTION MAXIMUM LIFT

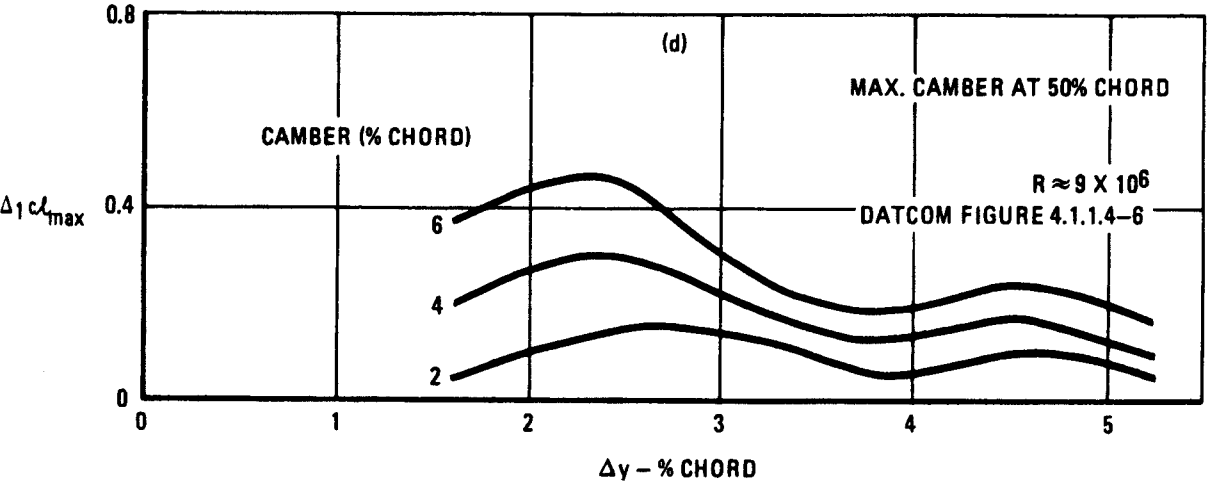

FIGURE B–4 EFFECT OF AIRFOIL CAMBER LOCATION AND AMOUNT ON SECTION MAXIMUM LIFT (CONCLUDED)

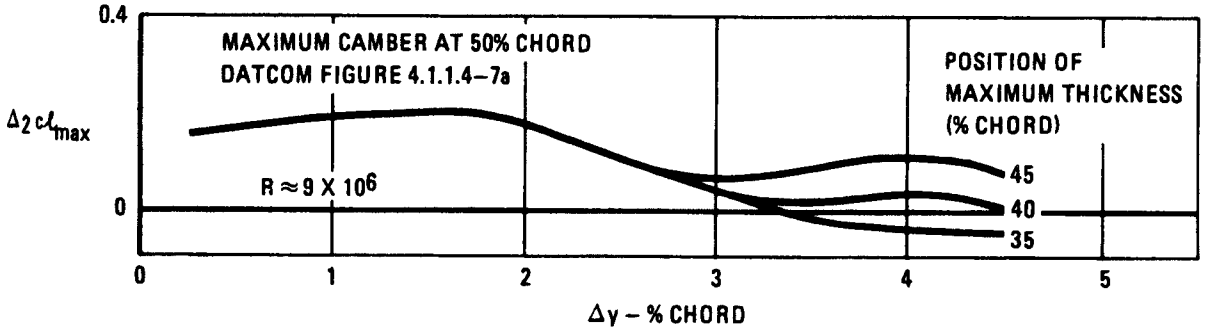

FIGURE B–5 EFFECT OF POSITION OF MAXIMUM THICKNESS ON SECTION MAXIMUM LIFT

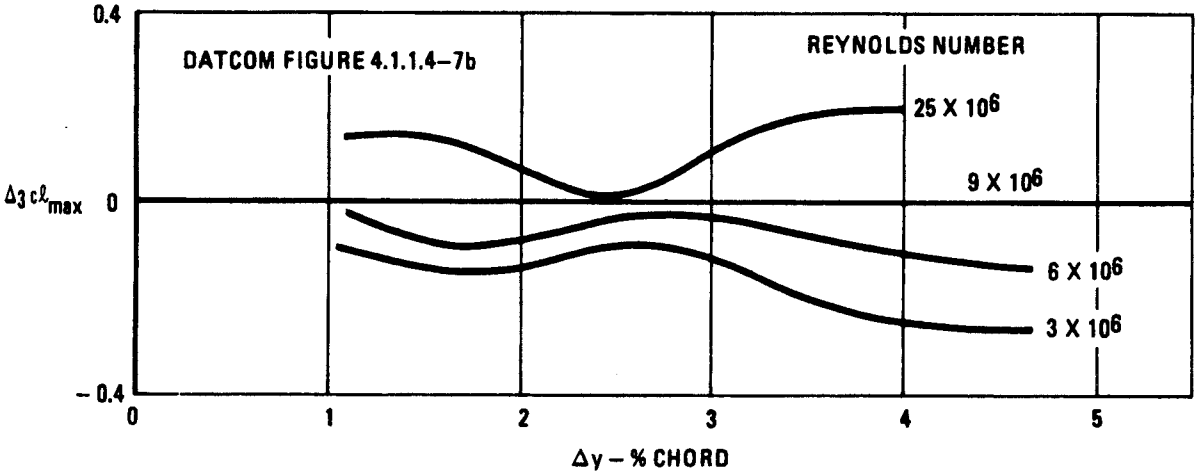

FIGURE B–6 EFFECT OF REYNOLDS NUMBER ON SECTION MAXIMUM LIFT

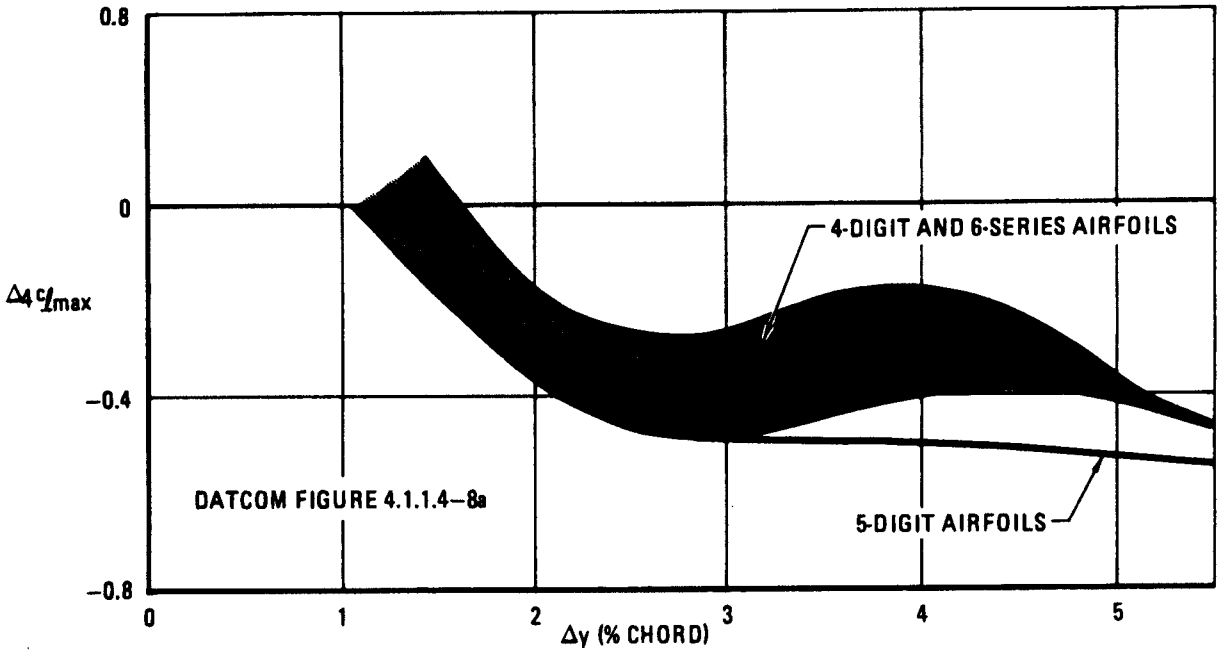

FIGURE B–7 EFFECT OF NACA STANDARD ROUGHNESS ON SECTION MAXIMUM LIFT

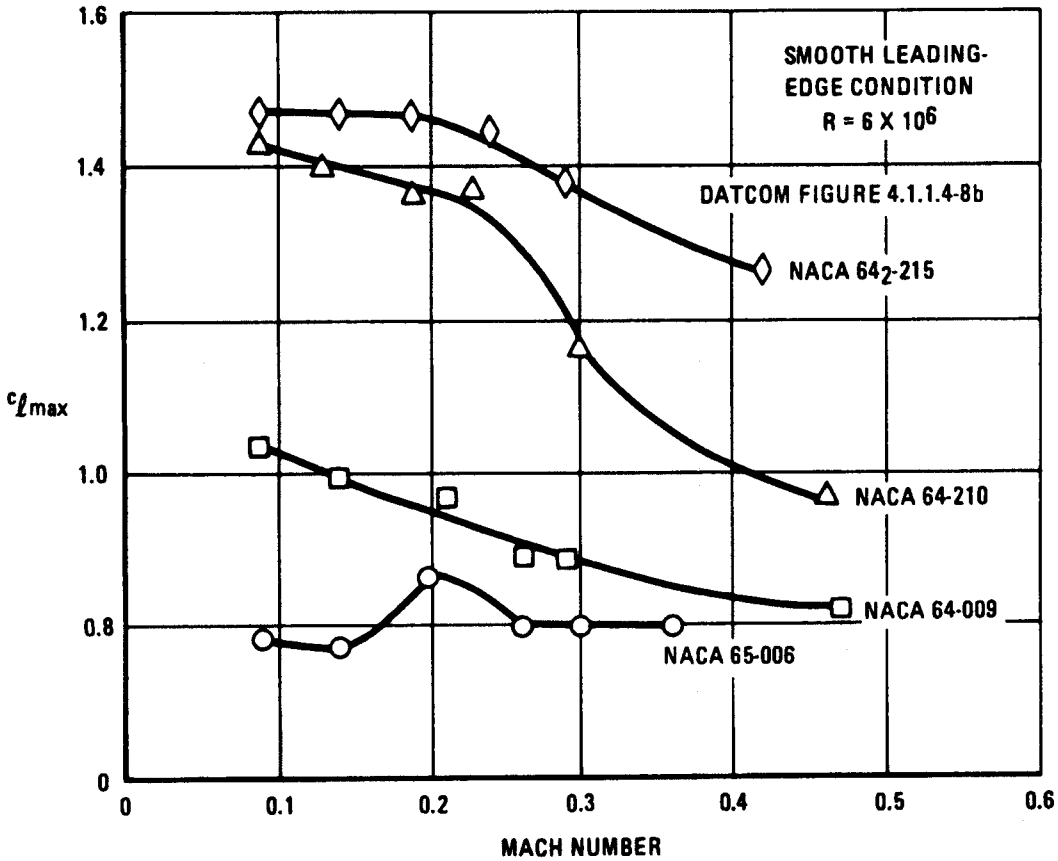

FIGURE B–8 TYPICAL VARIATION OF SECTION MAXIMUM LIFT WITH FREE-STREAM MACH NUMBER

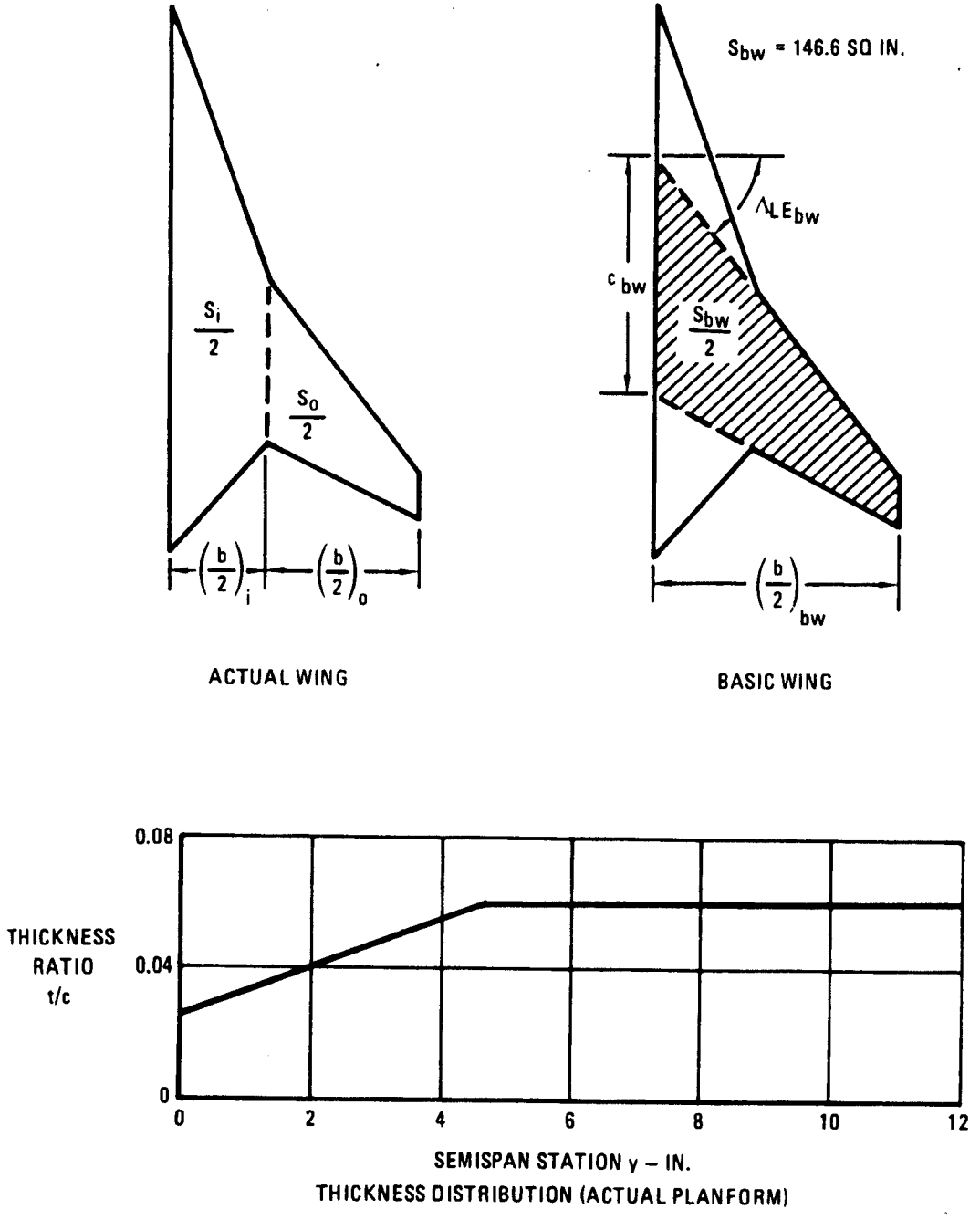

FIGURE B–9 GRAPHICAL SOLUTION FOR $(t/c)_{effective}$

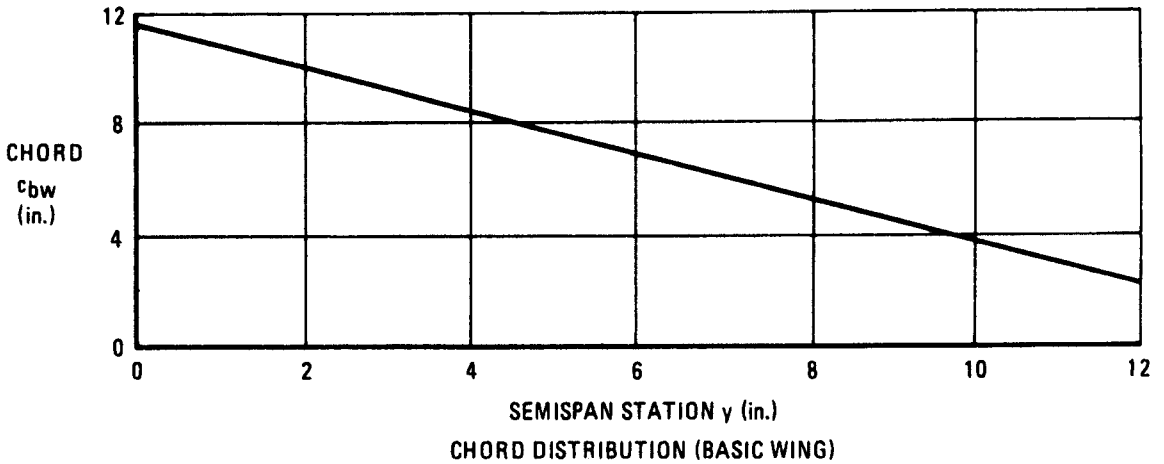

CHORD DISTRIBUTION (BASIC WING)

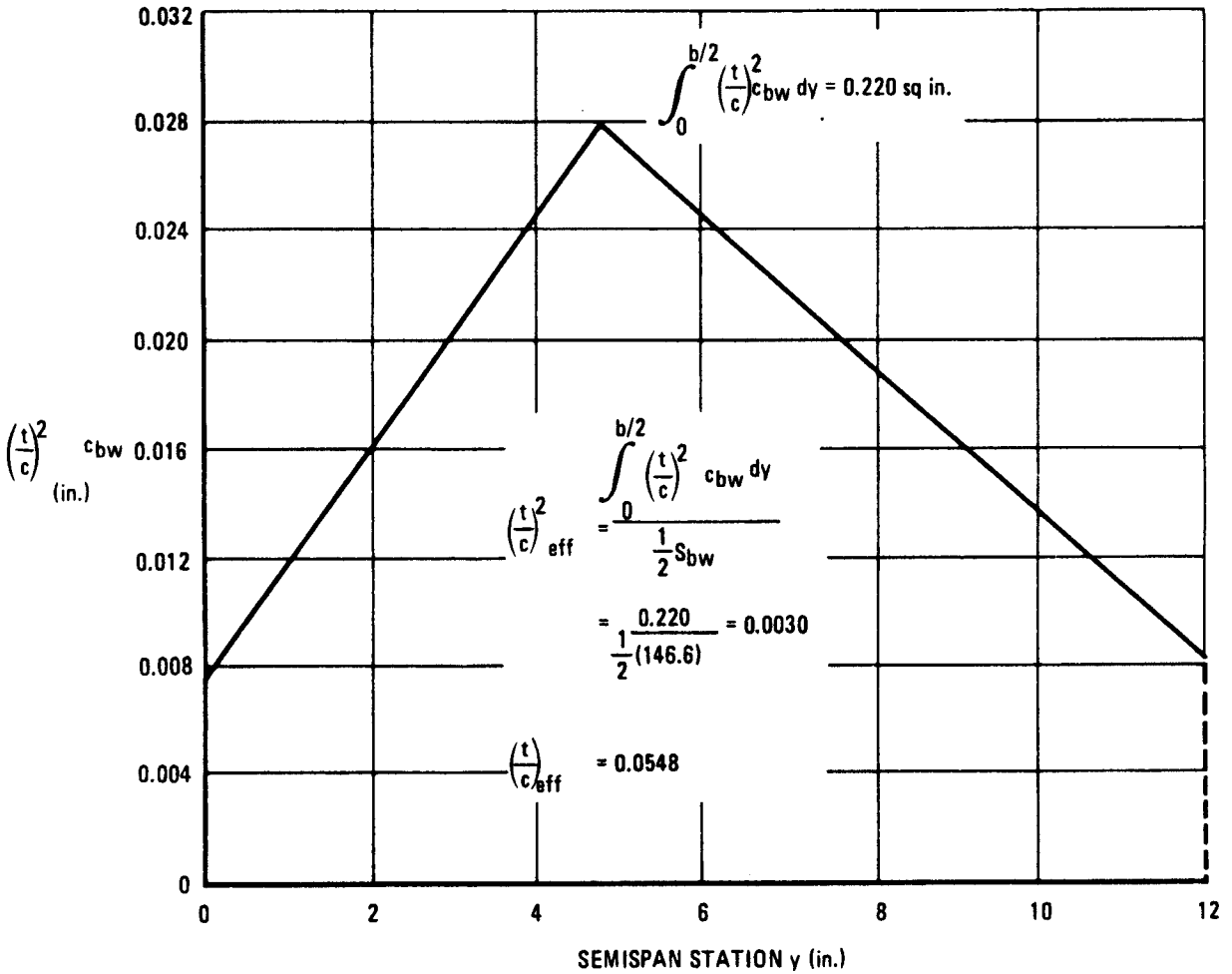

FIGURE B–9 GRAPHICAL SOLUTION FOR (t/c) EFFECTIVE (CONCLUDED)

B.4 AIRFOIL SECTION DESIGNATIONS

This section has been included to acquaint the user with the section geometric definitions, and the NACA designation scheme (reprinted from Datcom Section 2.2.1). The airfoil section module has been written to conform as closely to these designations as possible. Exceptions to the NACA designation scheme are described in Section 3.5.

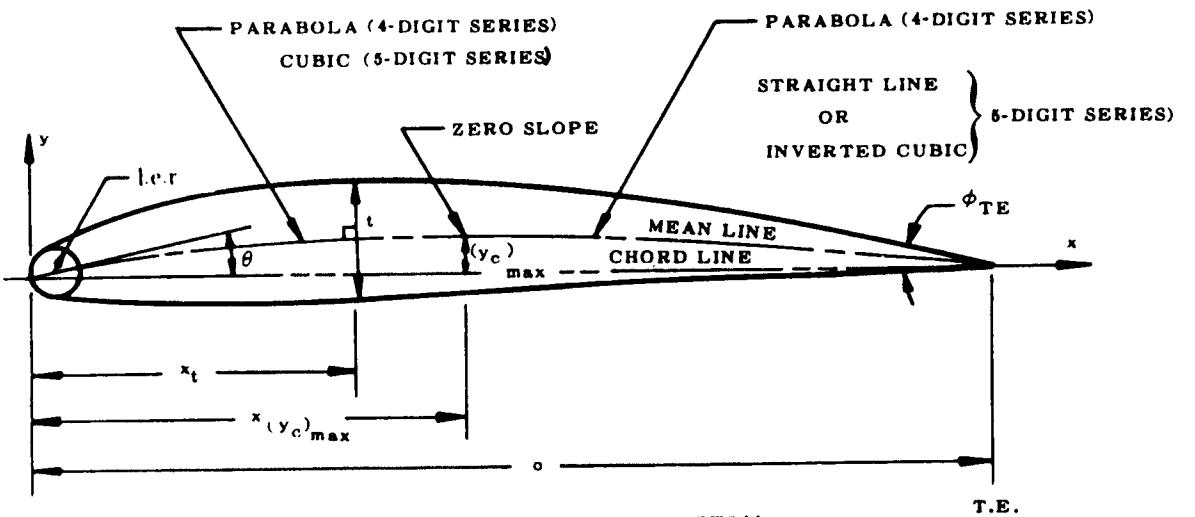

AIRFOIL SECTION GEOMETRY

BASIC SYMMETRIC AIRFOIL

c = chord of airfoil section

x = distance along chord measured from l.e.

y = ordinate at some value of x
(measured normal to and from the chord line for symmetric airfoils, measured normal to and from the mean line for cambered airfoils)

$y(x)$ = thickness distribution of airfoil

$t = 2y_{max}$ = maximum thickness of airfoil

x_t = position of maximum thickness

l.e.r. = leading-edge radius

ϕ_{TE} = trailing-edge angle (included angle between the tangents to the upper and lower surfaces at the trailing edge)

CAMBER MEAN LINE

$(y_c)_{max}$ = maximum ordinate of mean line

$y_c(x)$ = shape of mean line

$x_{(y_c)_{max}}$ = position of maximum camber

θ = slope of l.e.r. through l.e. equals the slope of the mean line at the l.e.

c_ℓ = section lift coefficient

c_{ℓ_i} = design section lift coefficient

"CLARK Y" AIRFOIL (NOT PROGRAMMED IN DIGITAL DATCOM)

x_t = 30% CHORD FOR ANY THICKNESS

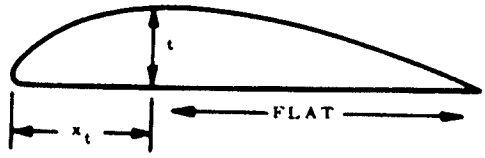

NACA 4-DIGIT SERIES AIRFOILS

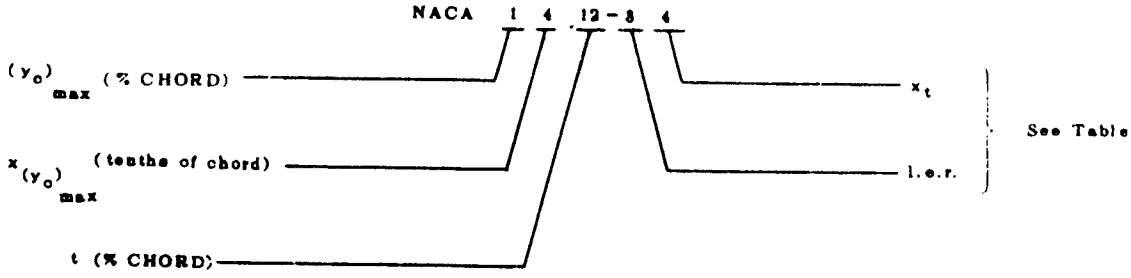

"Dash" numbers (numbers following a dash placed after the standard notation) are expressed only when l.e.r. and/or x_t are different from normal.

FIRST DASH NO.	l.e.r.	SECOND DASH NO.	x_t (% CHORD)
0	Sharp	2	20
3	½ Normal	3	30 (Normal)
6	Normal	4	40
9	3 × Normal	5	50

GERMAN NOTATION OF NACA 4-DIGIT AND 5-DIGIT SERIES AIRFOILS

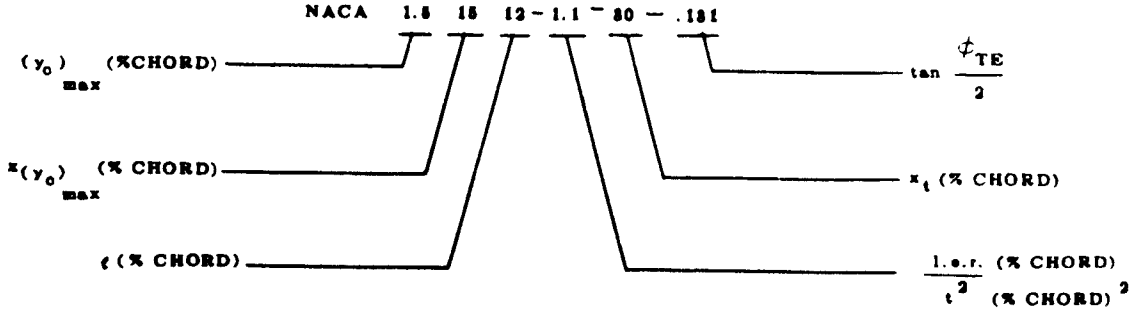

NACA 5-DIGIT SERIES AIRFOIL

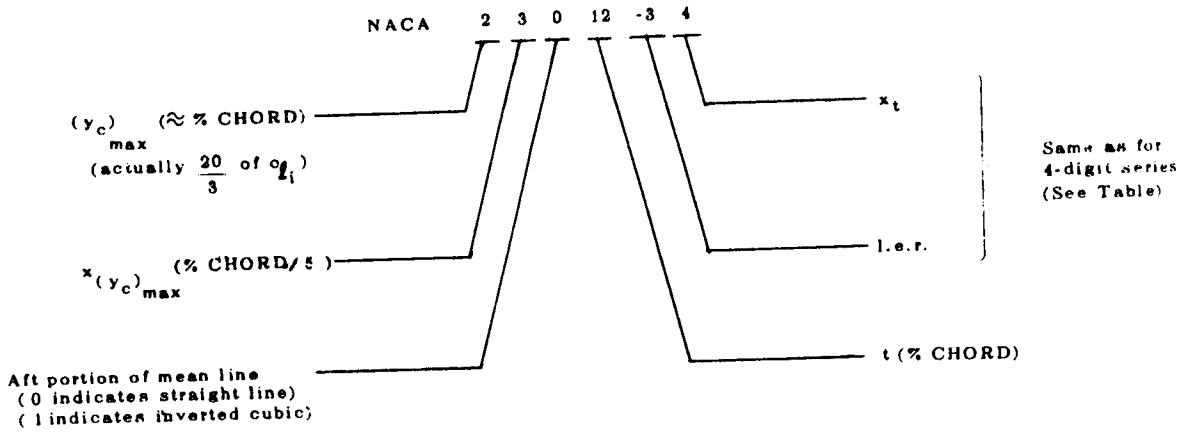

NACA 1- SERIES AIRFOILS

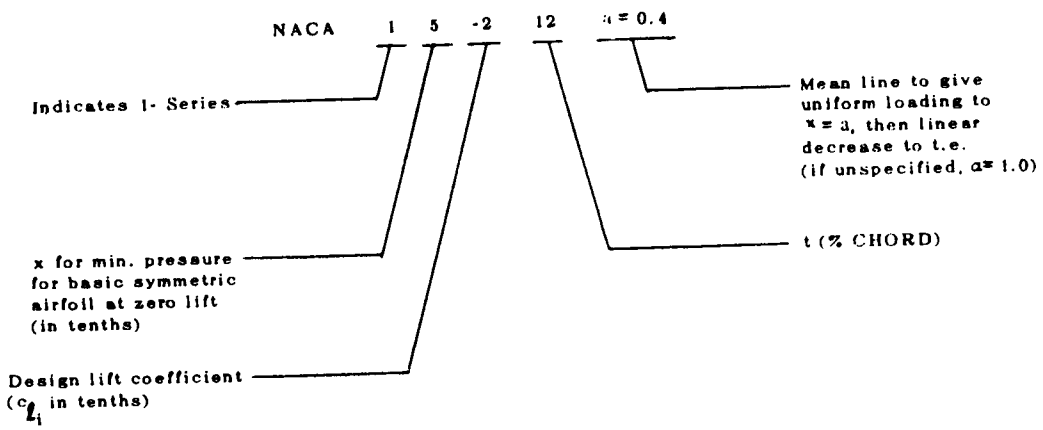

NACA 6- SERIES AIRFOILS

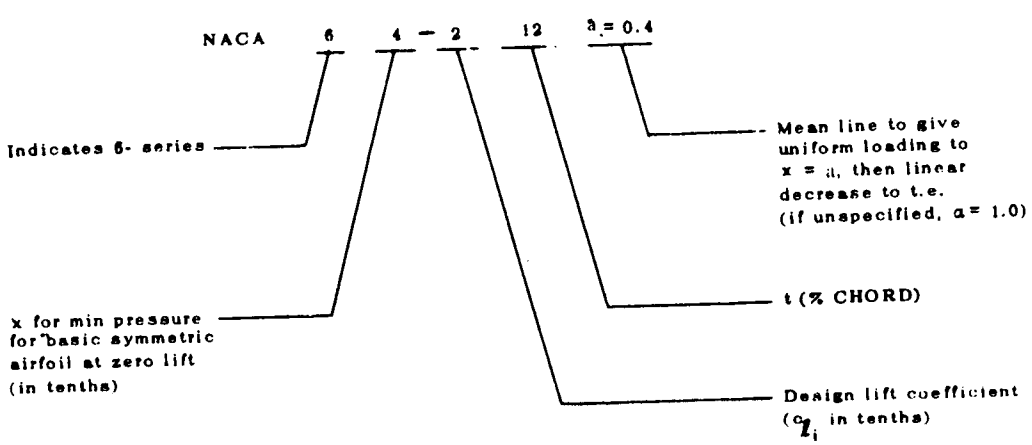

NACA 64 . 8 - 212 a = 0.4

as before — 64

8 — c_ℓ range for low drag (tenths above and below c_{ℓ_i})

212 — as before

a = 0.4 — as before

NACA 64_3 212 a = 0.4

as before — 64_3

3 — c_ℓ range for low drag with improved thickness distribution (tenths above and below c_{ℓ_i})

212 — as before

a = 0.4 — as before

To increase or decrease the airfoil thickness

(NOT PROGRAMMED IN DIGITAL DATCOM)

NACA 64 (212) - 214 a = 0.4

as before — 64

(212) — original c_{ℓ_i} and t

214 — new c_{ℓ_i} and t (linearly increased ordinates)

a = 0.4 — as before

NACA 64 (312) - 214 a = 0.4

as before — 64

(312) — original c_{ℓ_i} and t

214 — new c_{ℓ_i} and t (linearly increased ordinates)

a = 0.4 — as before

NACA 64_3 A 212

as before — 64_3

A — Indicates modified thickness distribution and type of mean line. Sections designated by Letter A are substantially straight on both surfaces from about .8c to t.e. Pressures at the nose are same as for the 64_3-212 airfoil.

212 — as before

NACA 7- SERIES AIRFOILS (NOT PROGRAMMED IN DIGITAL DATCOM)

NACA 7 3 6 A 4 12

- 7 — Indicates 7- series (also 8- series)
- 3 — x for favorable pressure gradient on upper surface at design c_l (in tenths)
- 6 — x for favorable pressure gradient on lower surface at design c_l (in tenths)
- A — Serial letter designating thickness distribution and mean line
- 4 — Design lift coefficient. (c_{l_i} in tenths)
- 12 — t (percent chord)

SUPERSONIC AIRFOILS (AS PROGRAMMED IN DIGITAL DATCOM)

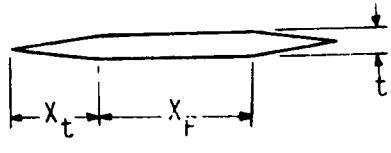

S - 3 - 30.0 - 2.5 - 20.0

- S — SUPERSONIC
- 3 — TYPE OF SECTION
  1 = DOUBLE WEDGE
  2 = CIRCULAR ARC
  3 = HEXAGONAL
- 30.0 — X_t (percent chord)
- 2.5 — t (percent chord)
- 20.0 — X_F (percent chord)